Atlantic

legrand®

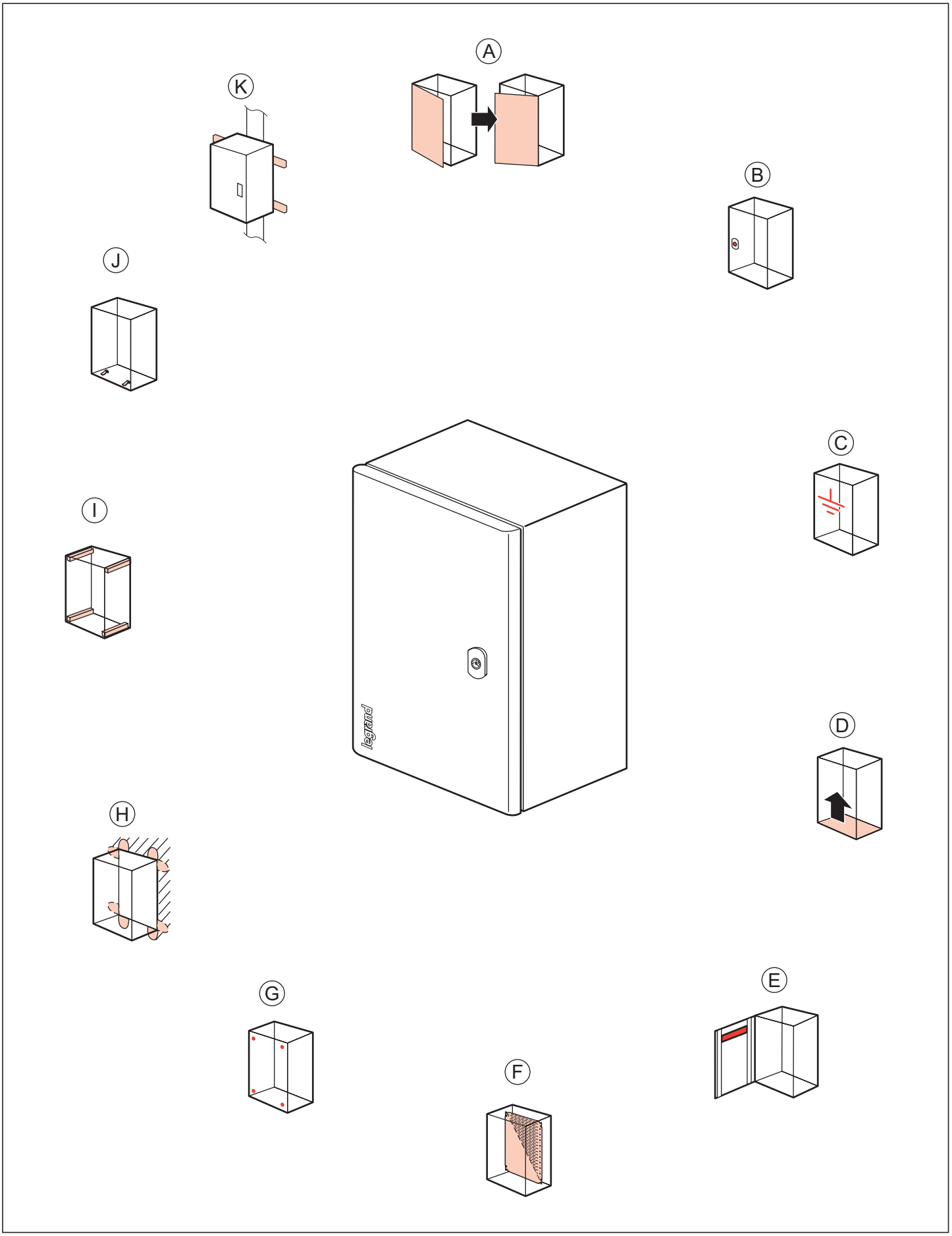

LE08301AA-01

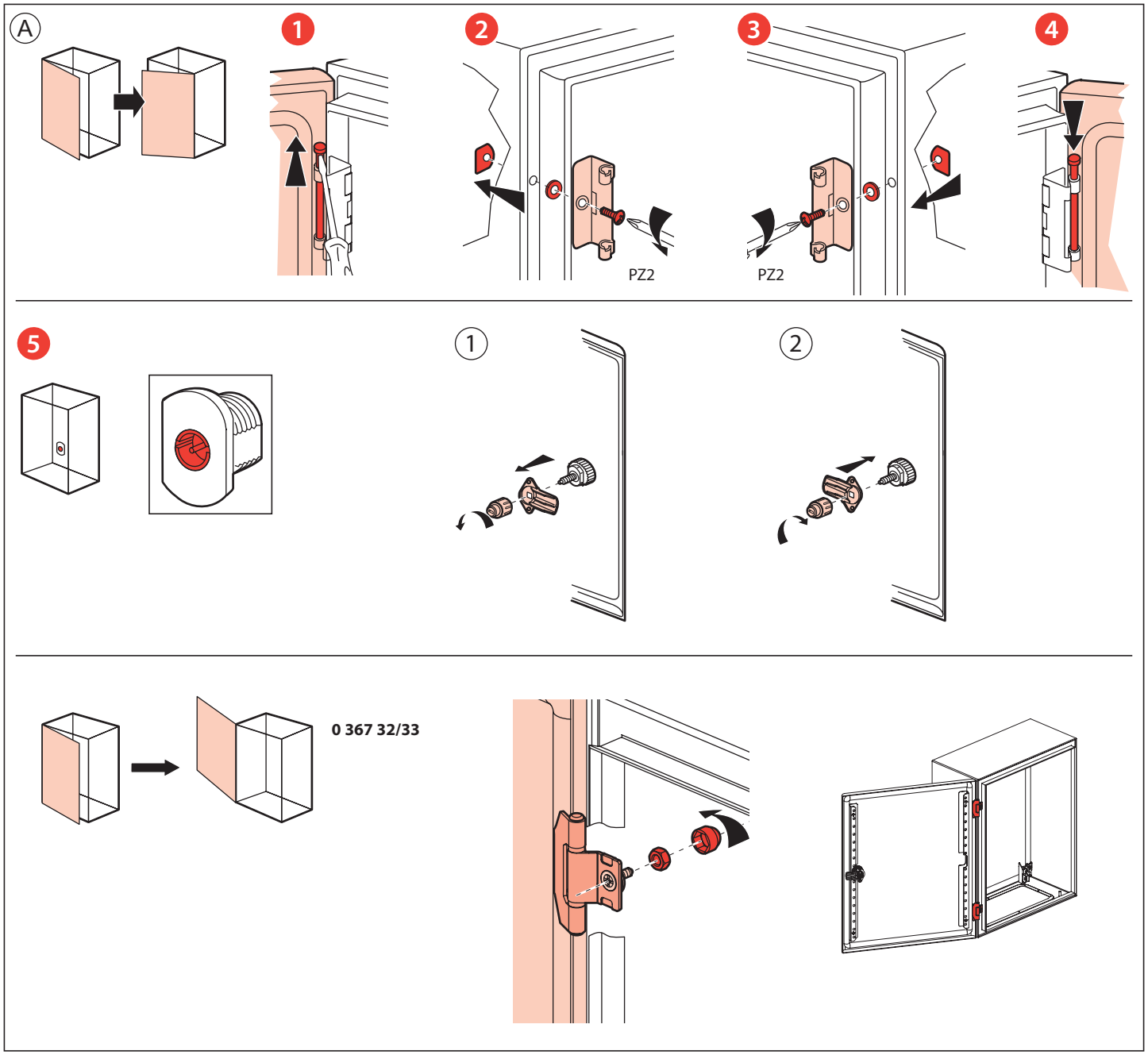

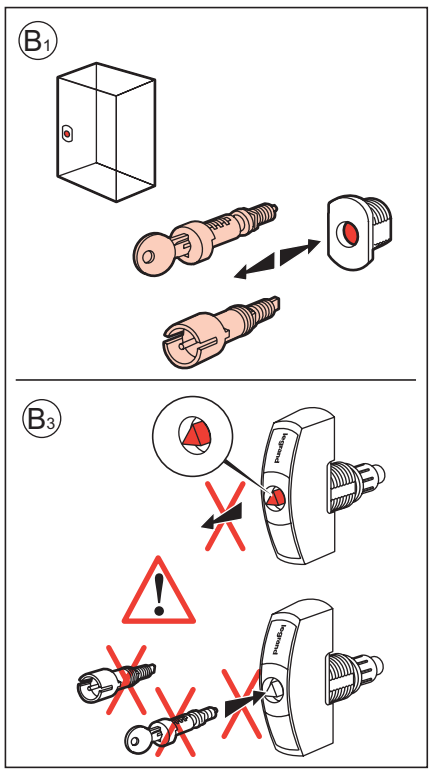

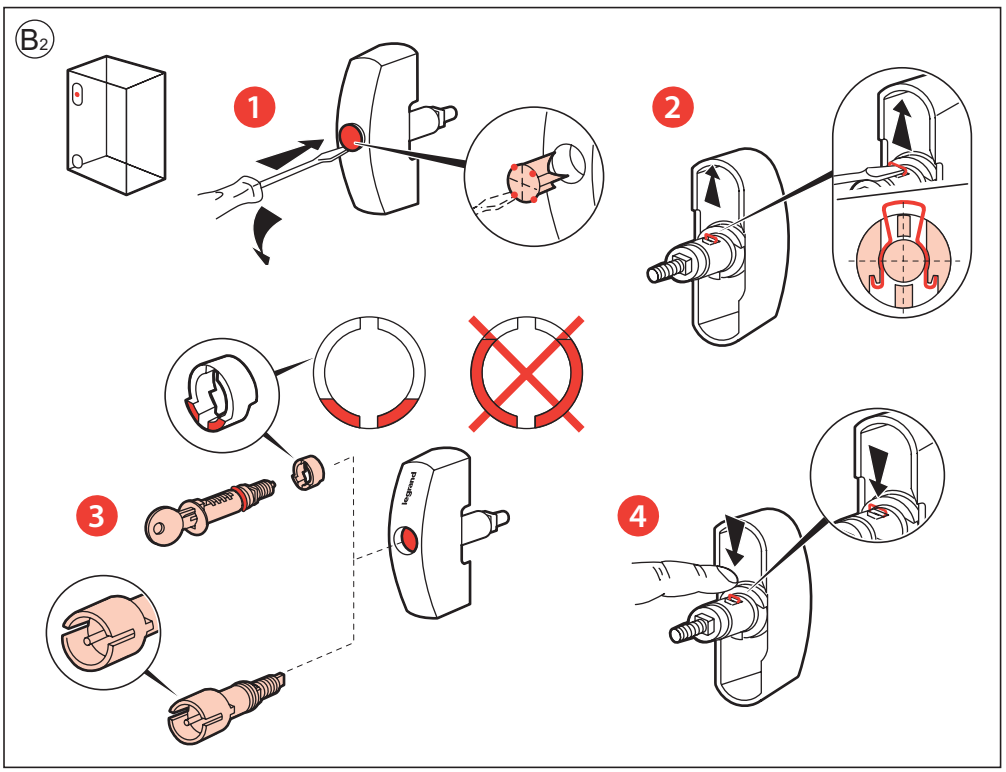

LE08301AA-01

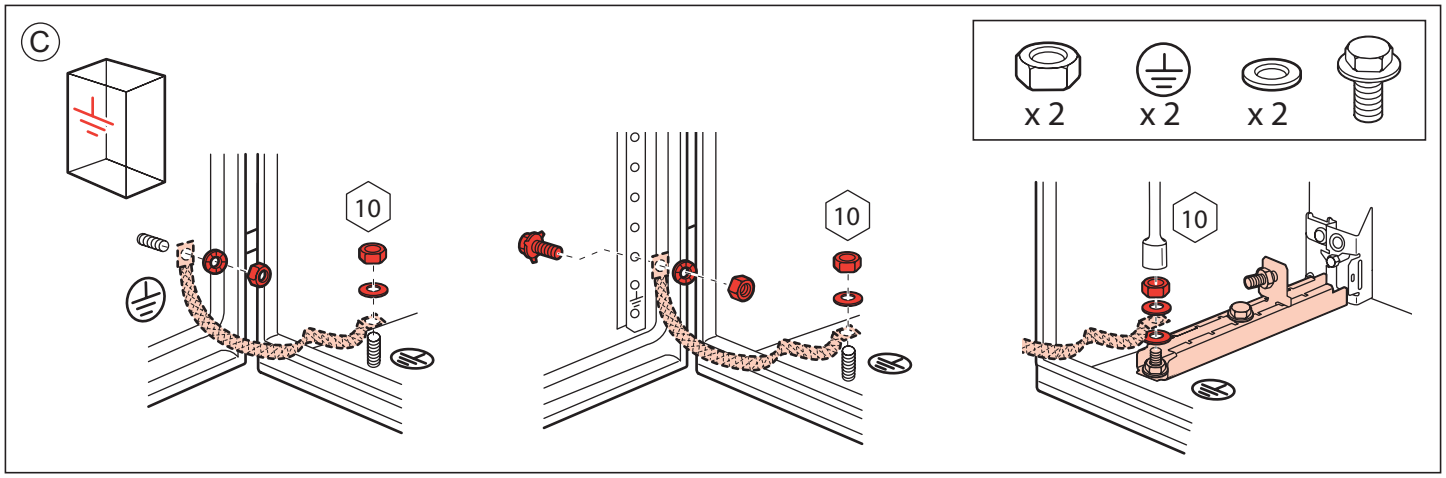

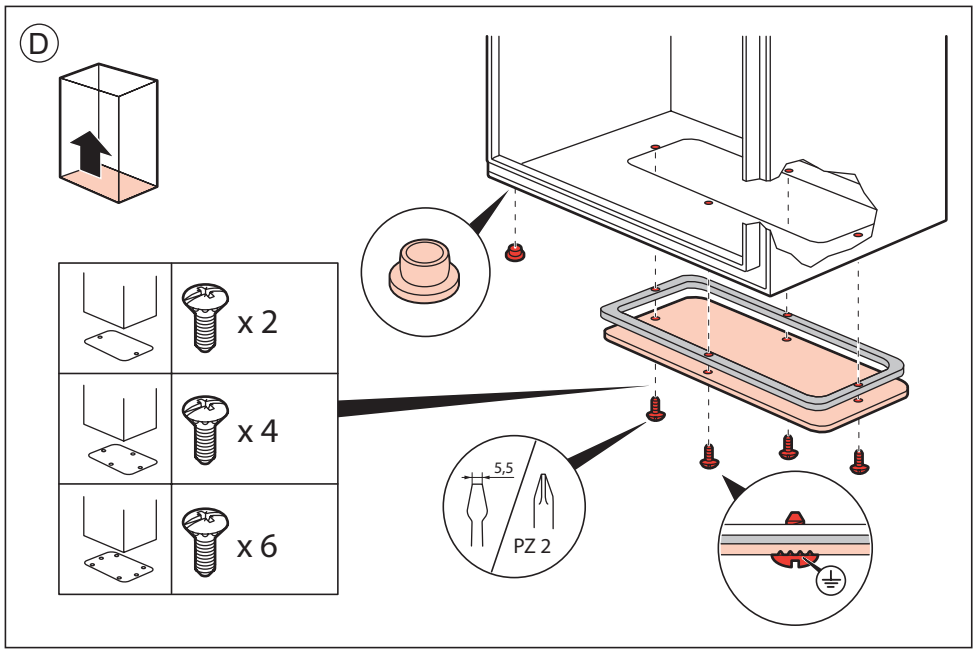

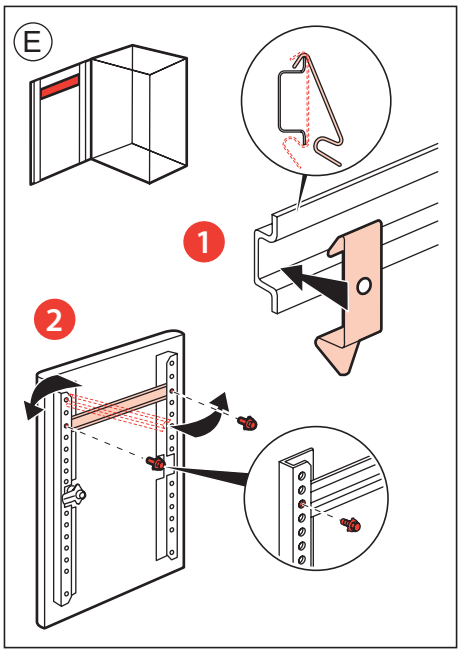

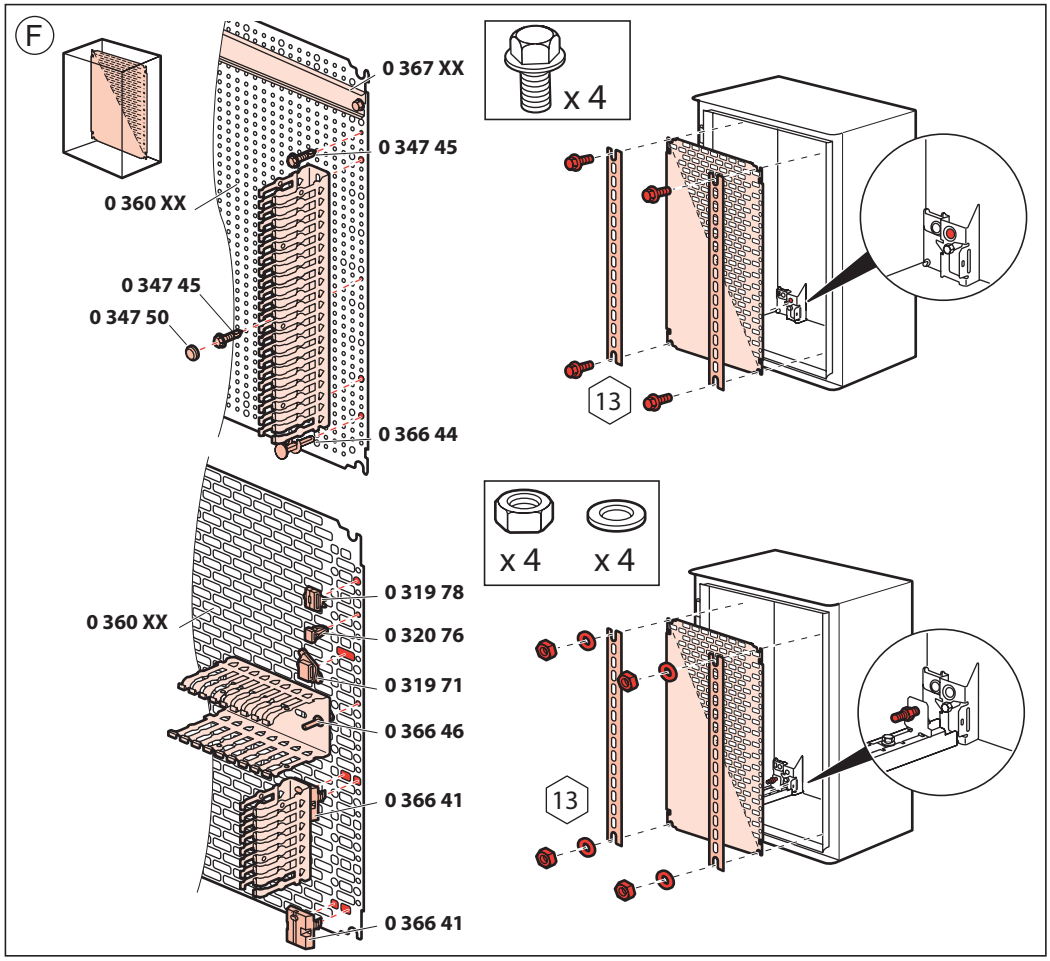

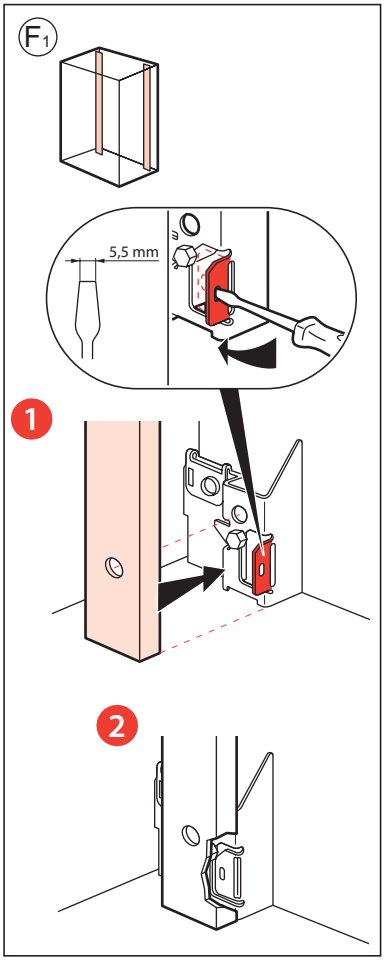

LE08301AA-01

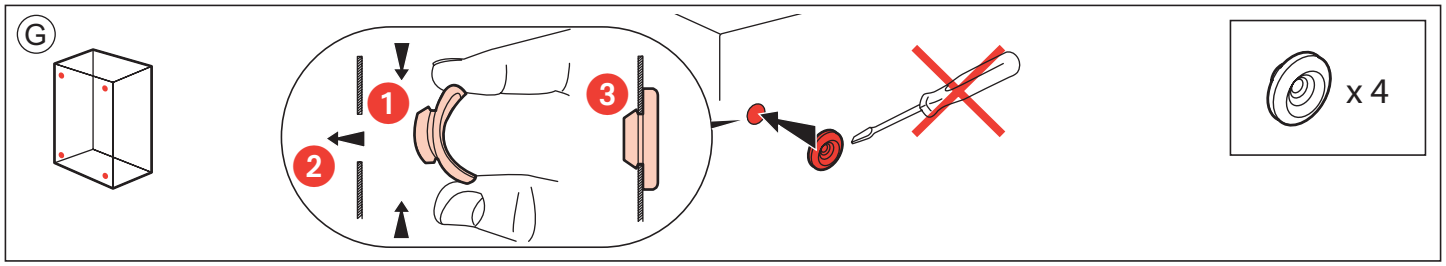

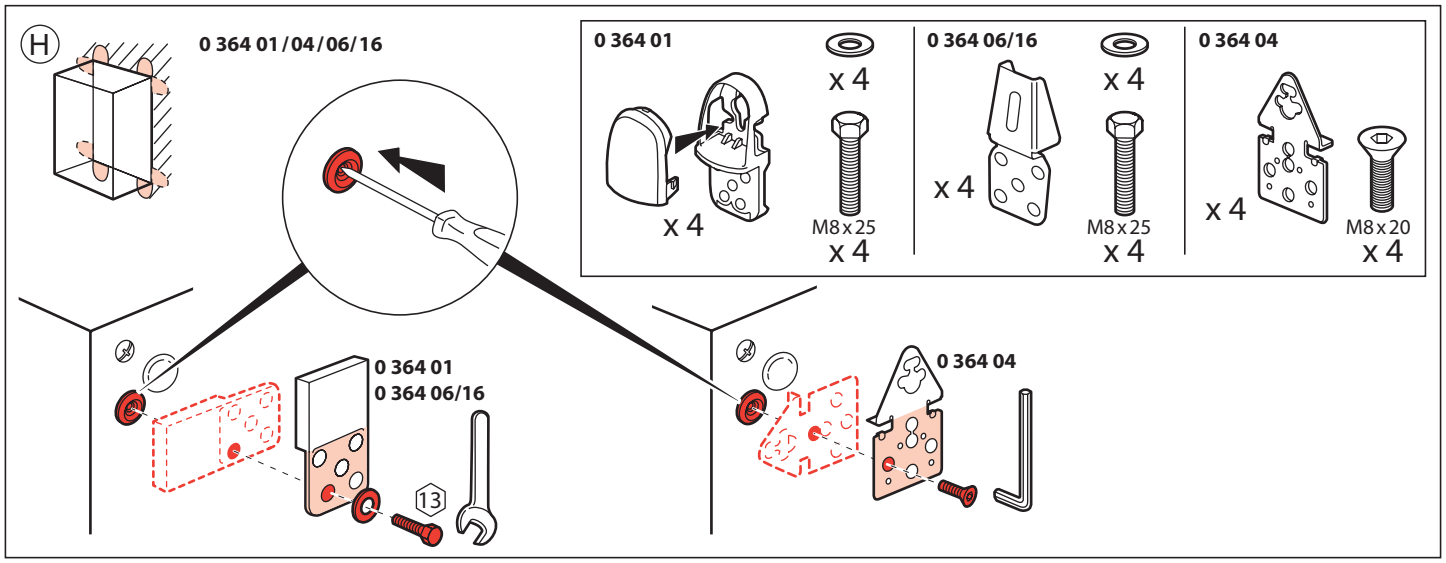

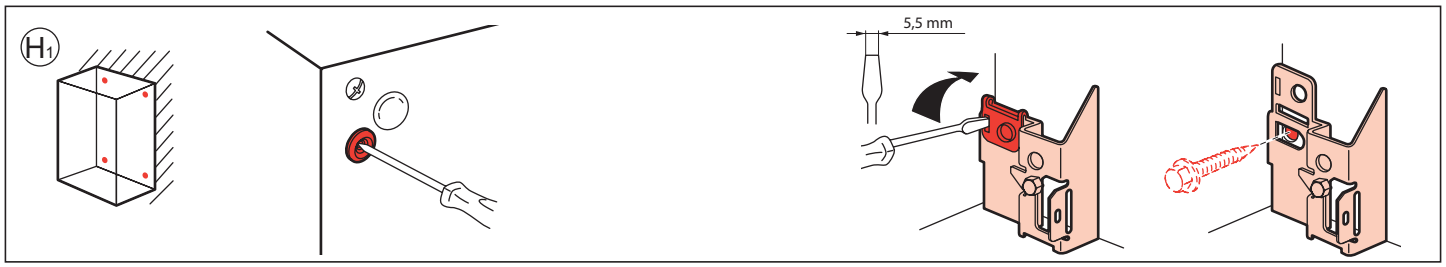

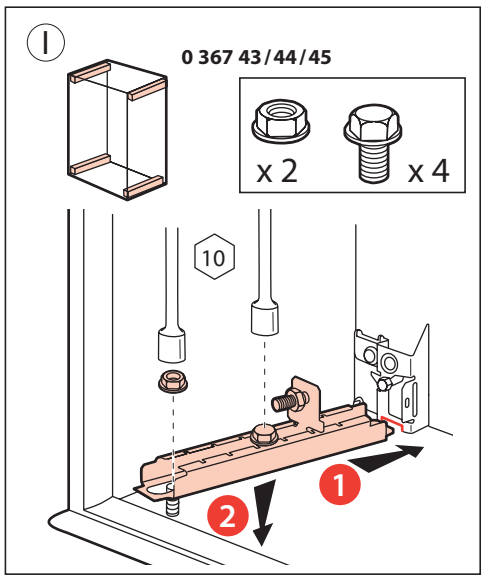

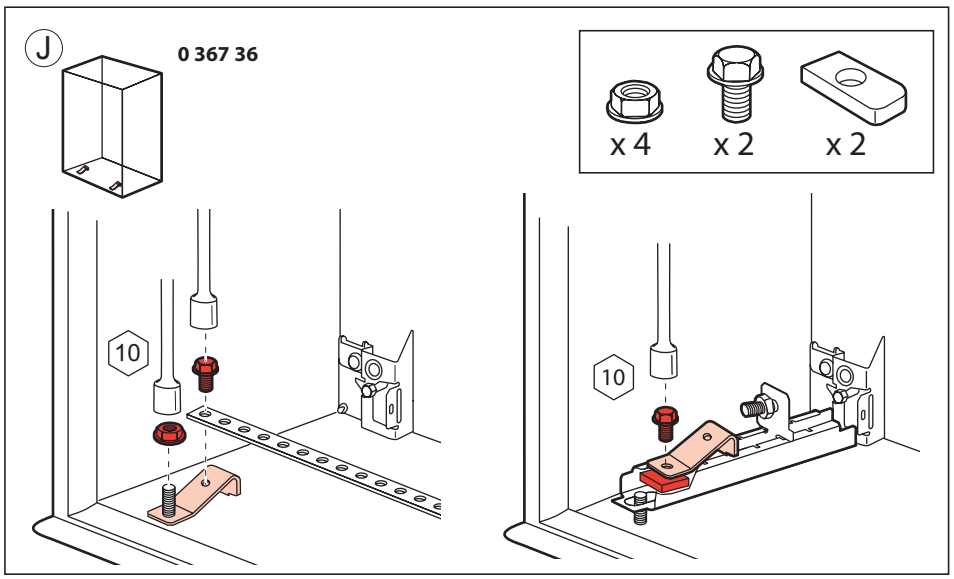

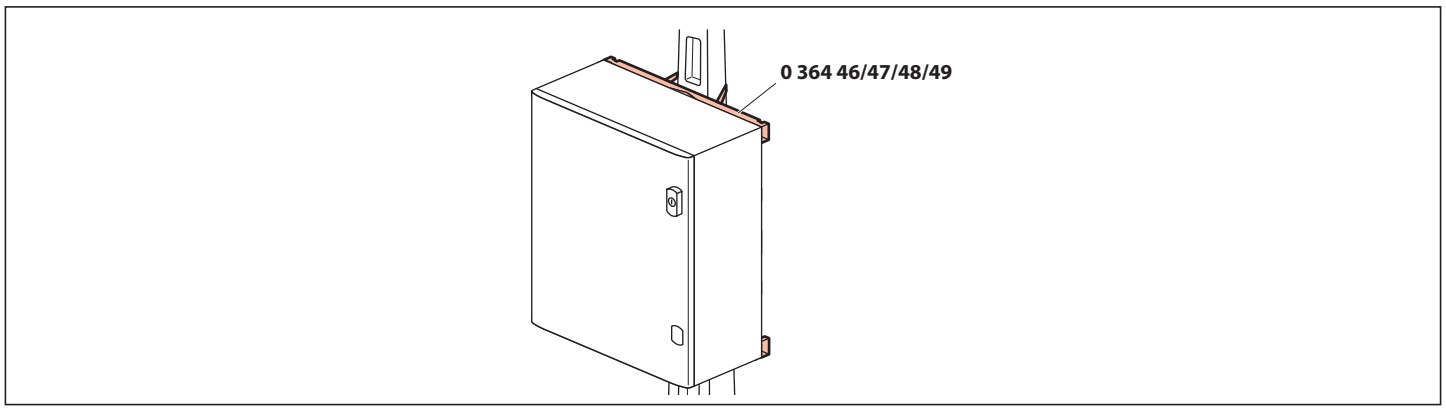

LE08301AA-01