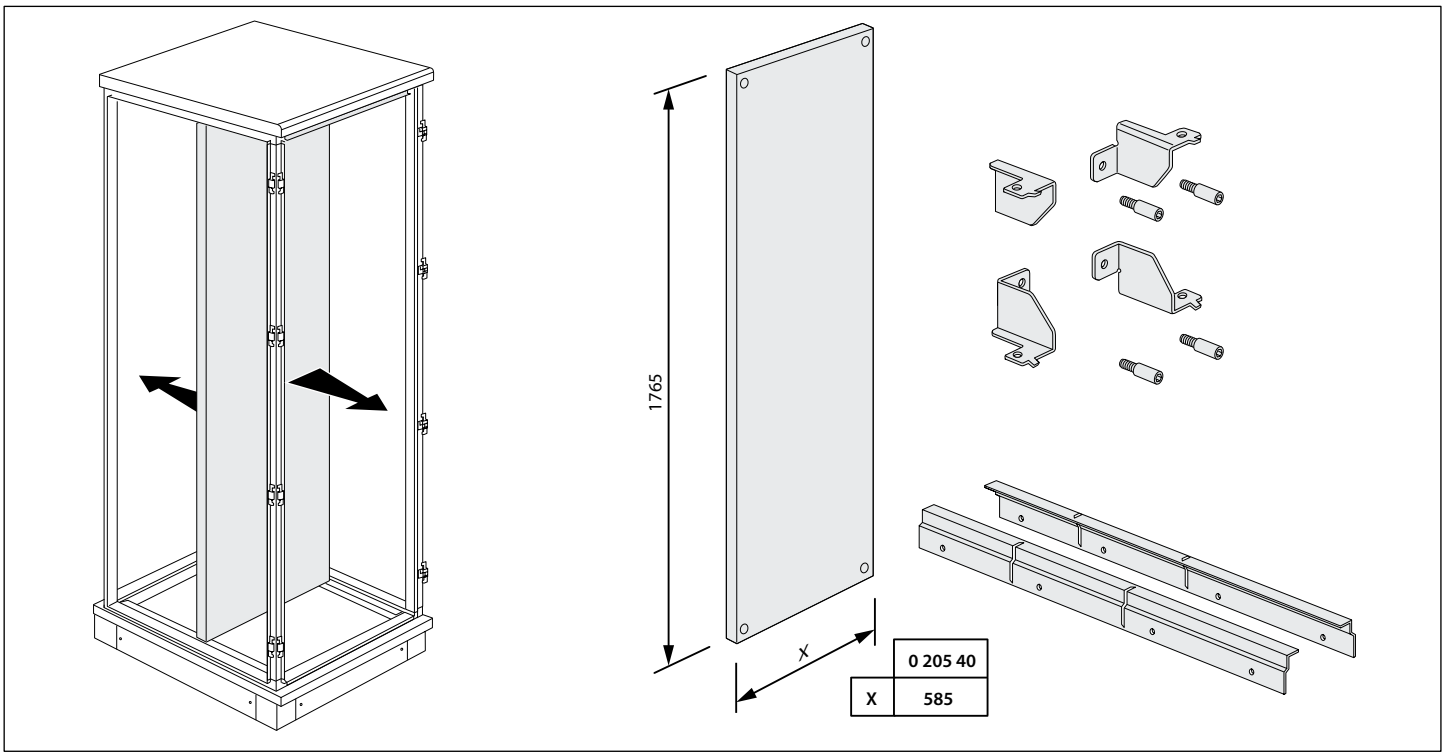

	0 205 40
X	585

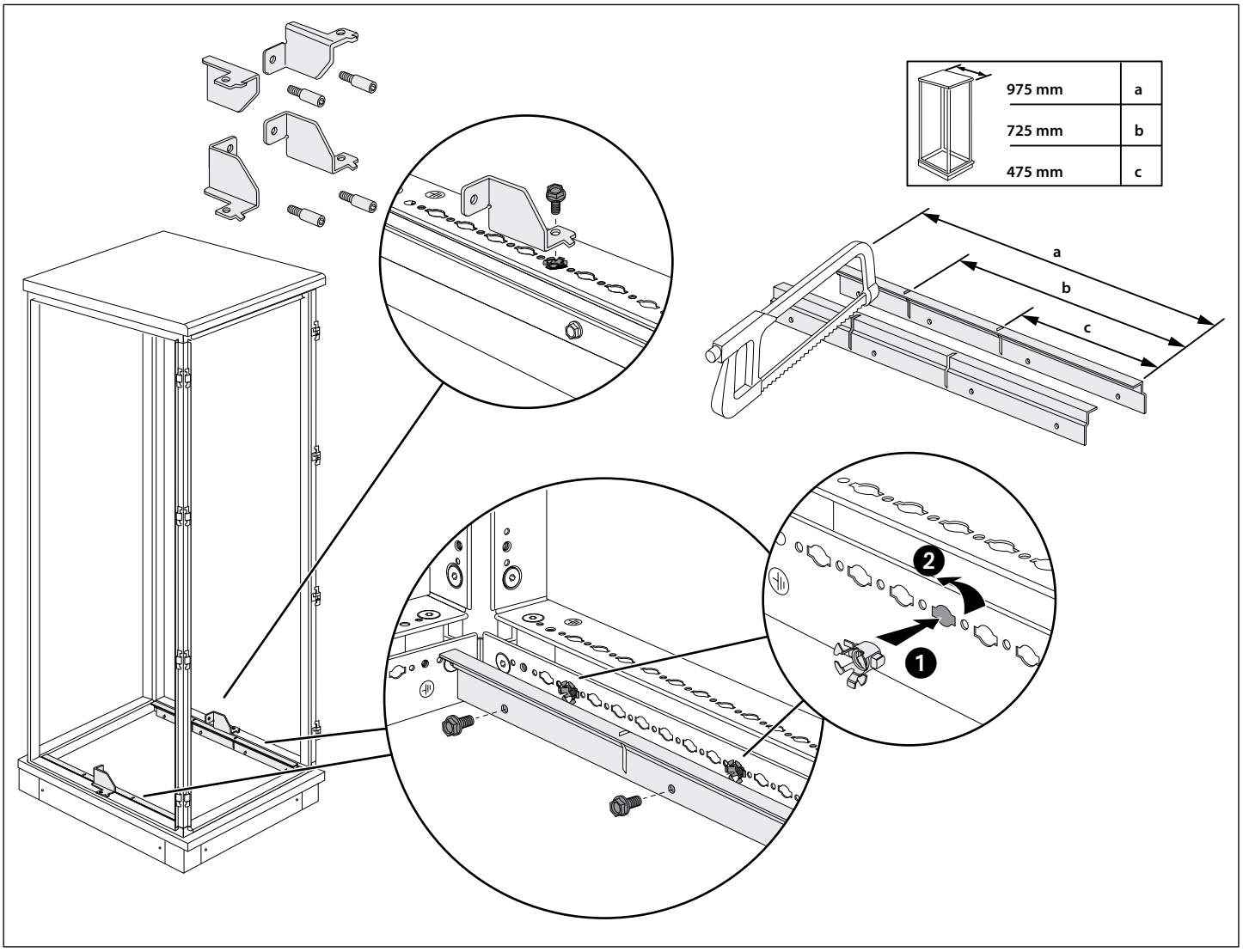

975 mm	a
725 mm	b
475 mm	c

F0934D

❶

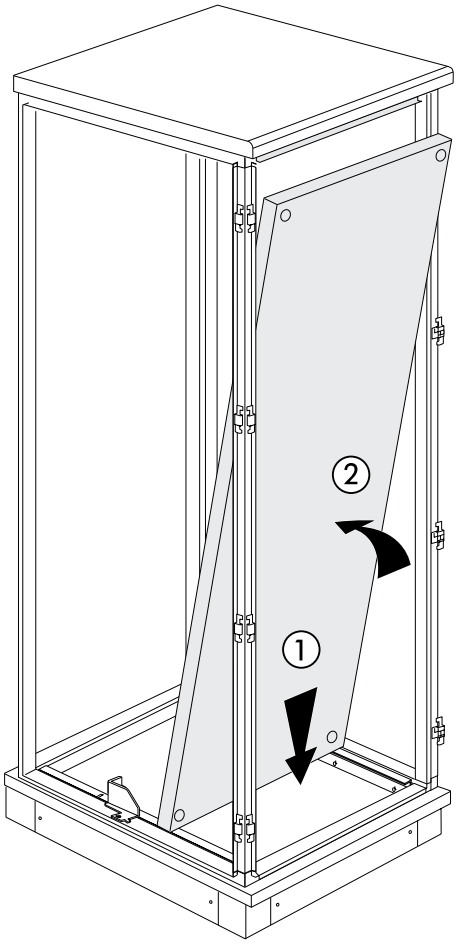
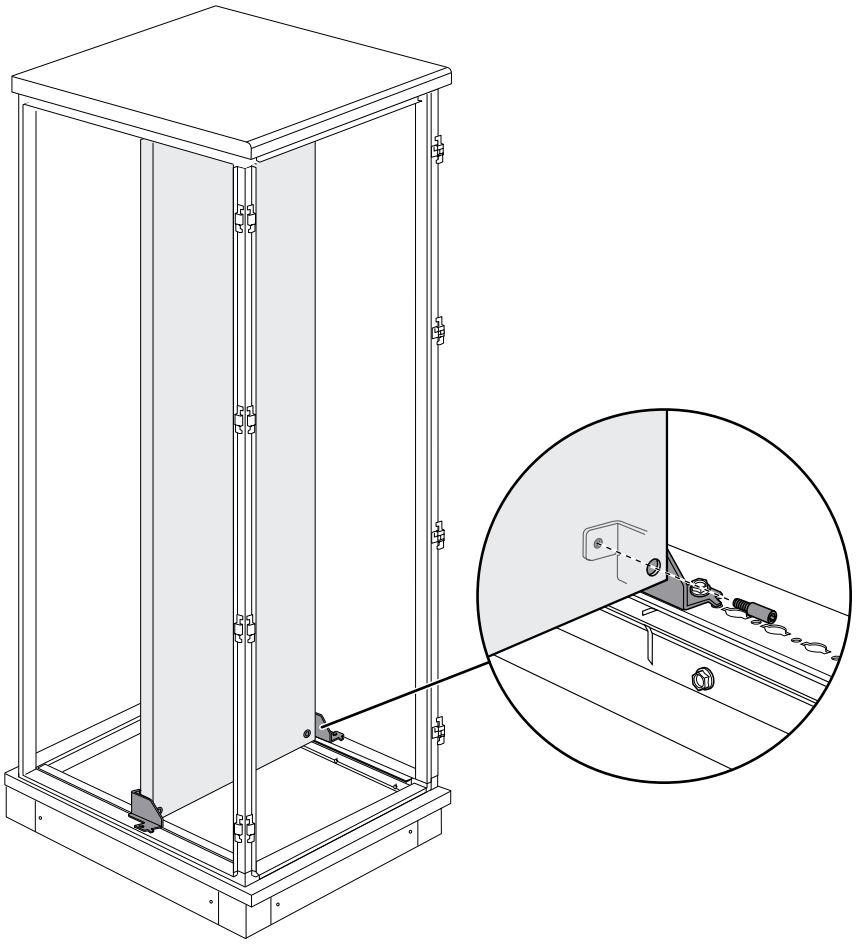
❷