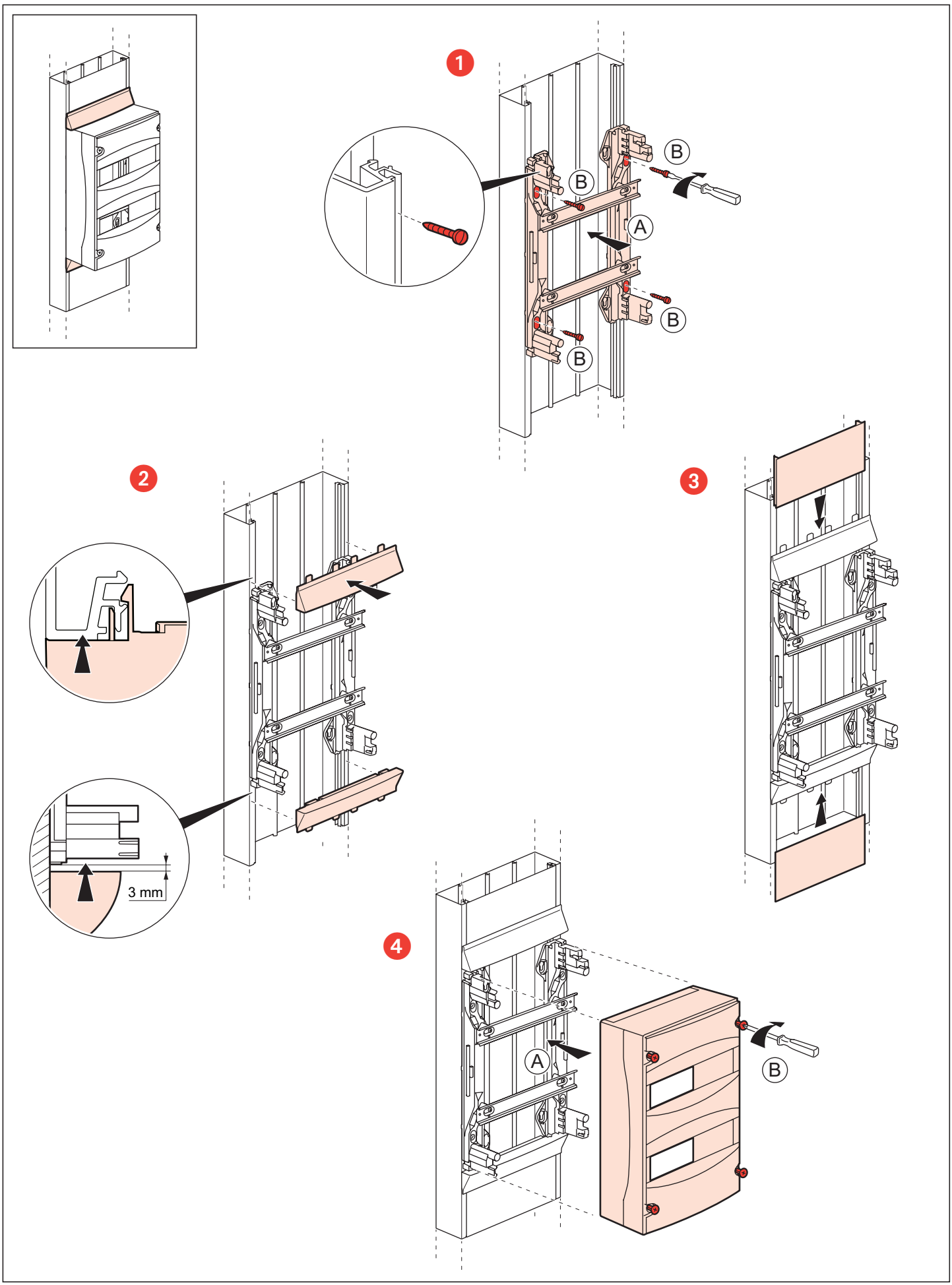

N104870327/00

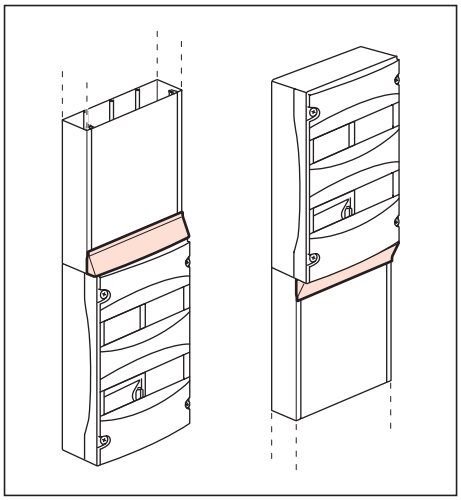

1

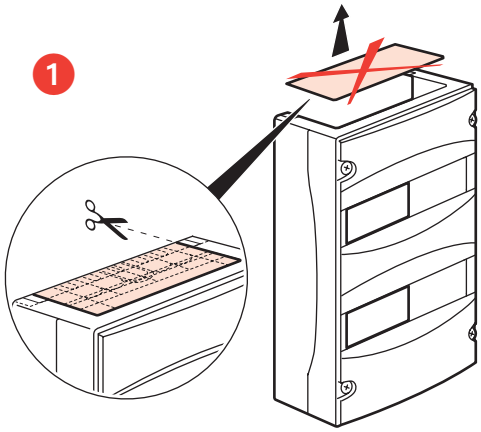

2

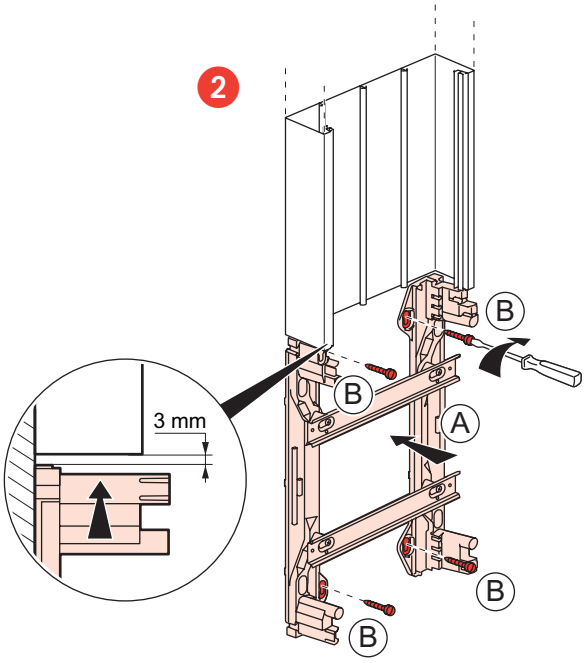

3

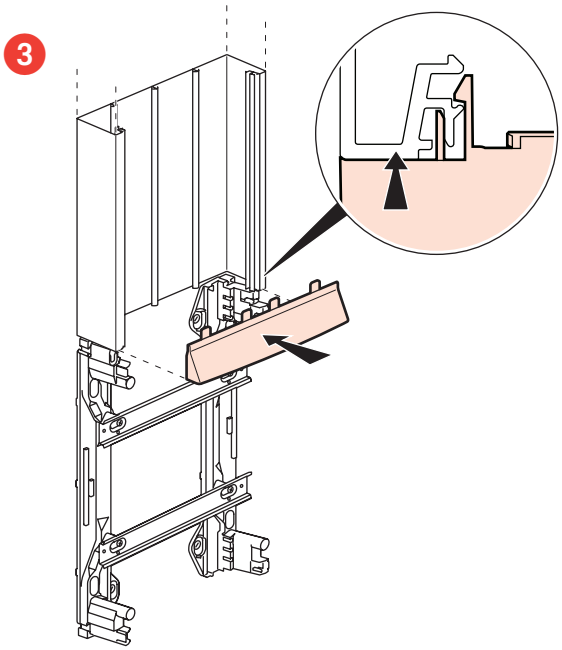

4

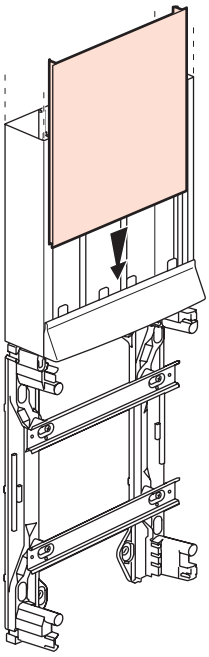
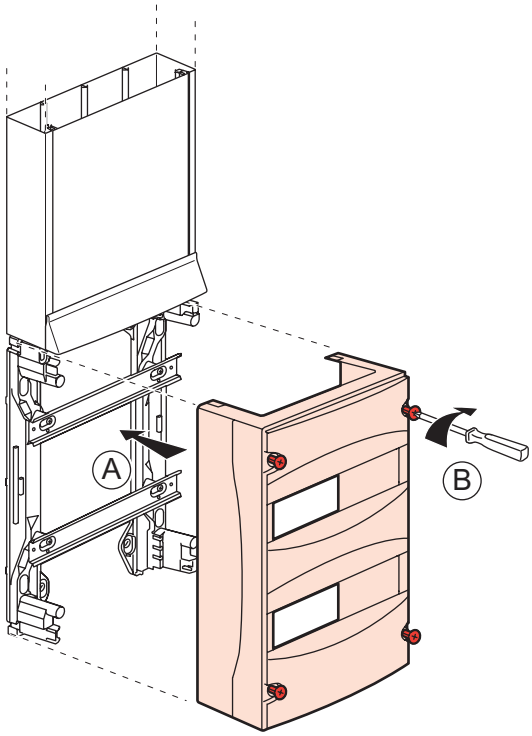
5