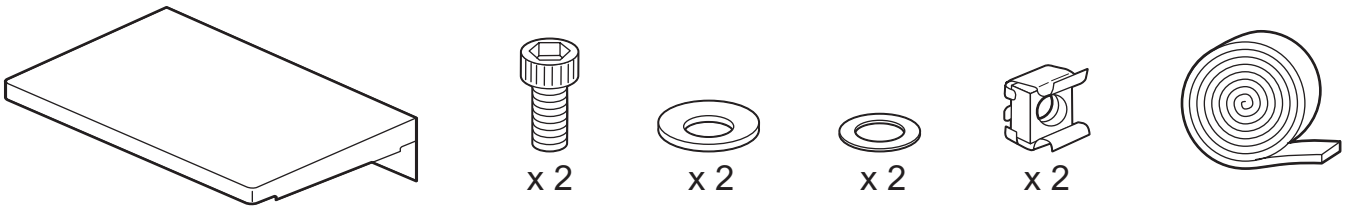

1

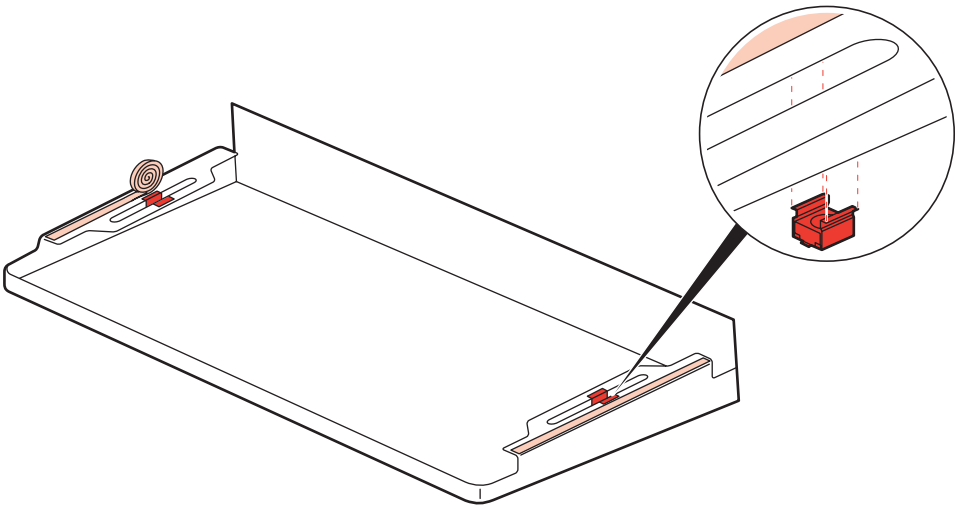

2

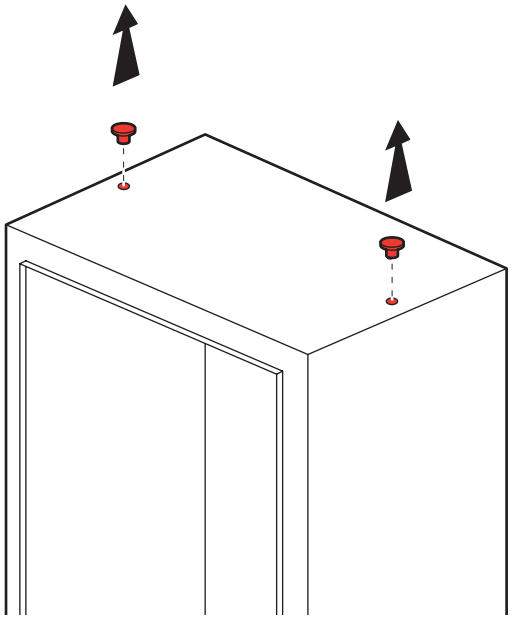

3

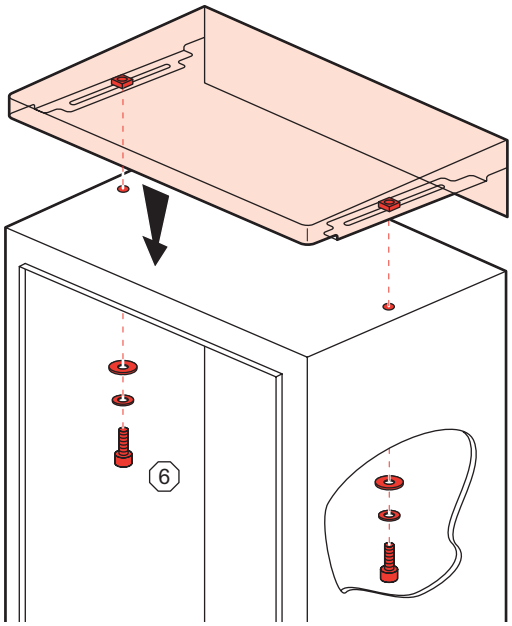

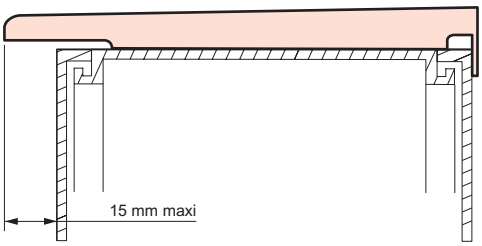

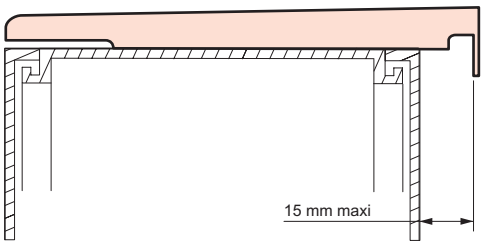

N041629/02