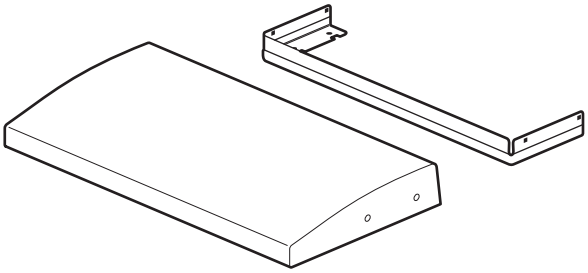

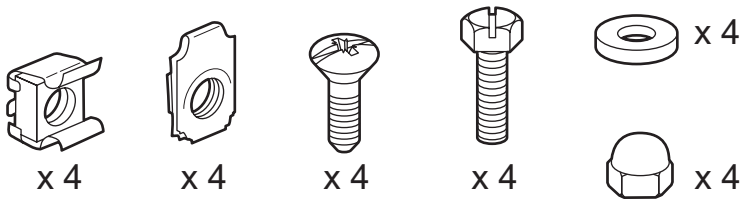

1

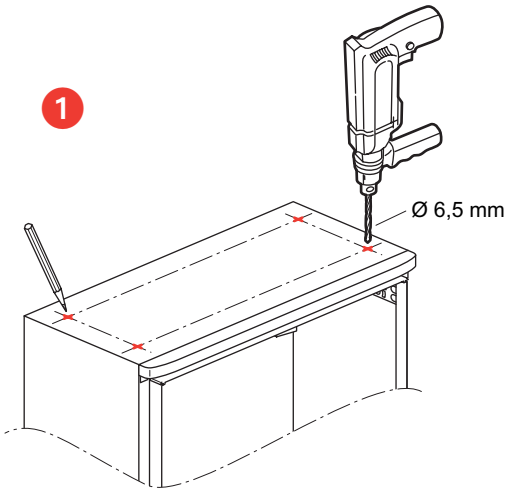

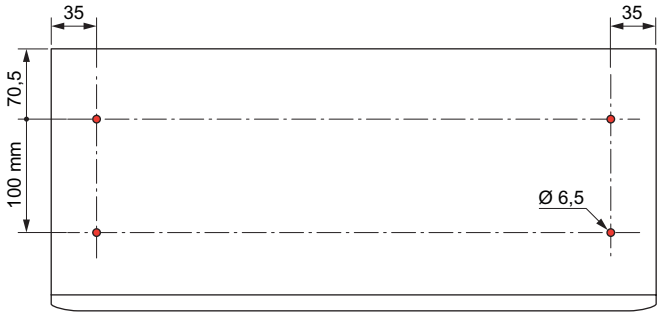

2

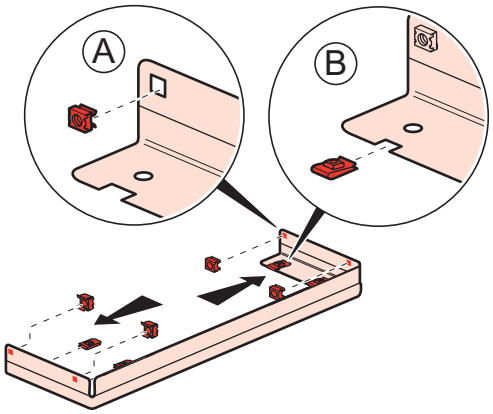

3

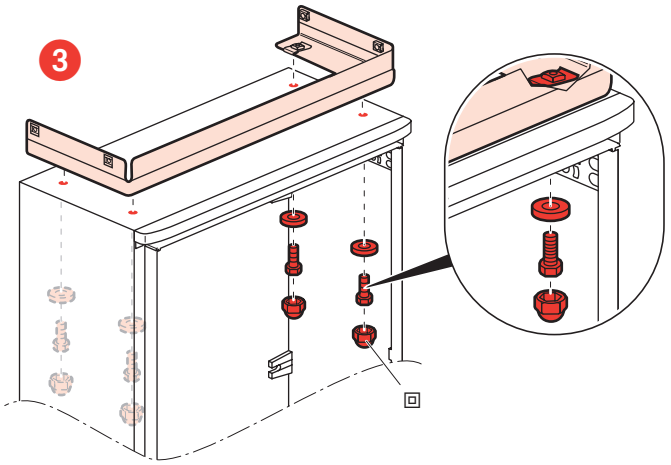

4

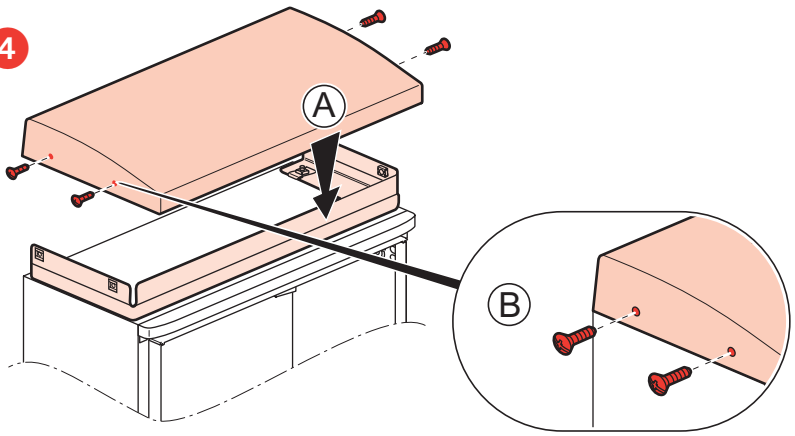

N041607/00