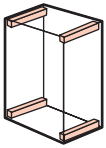

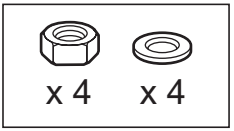

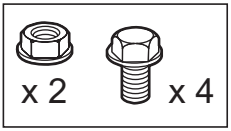

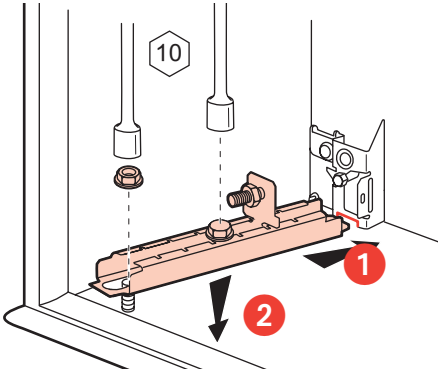

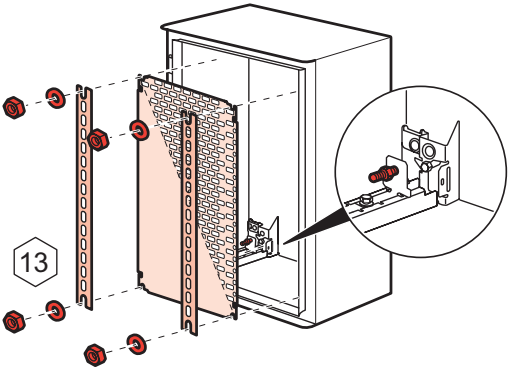

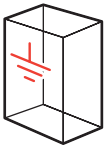

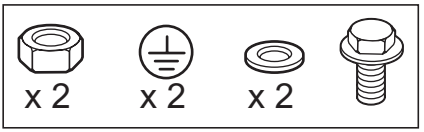

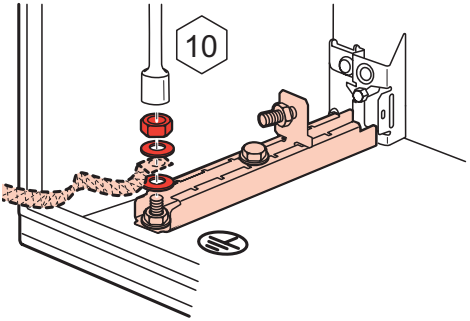

N041216/01