Atlantic

legrand®

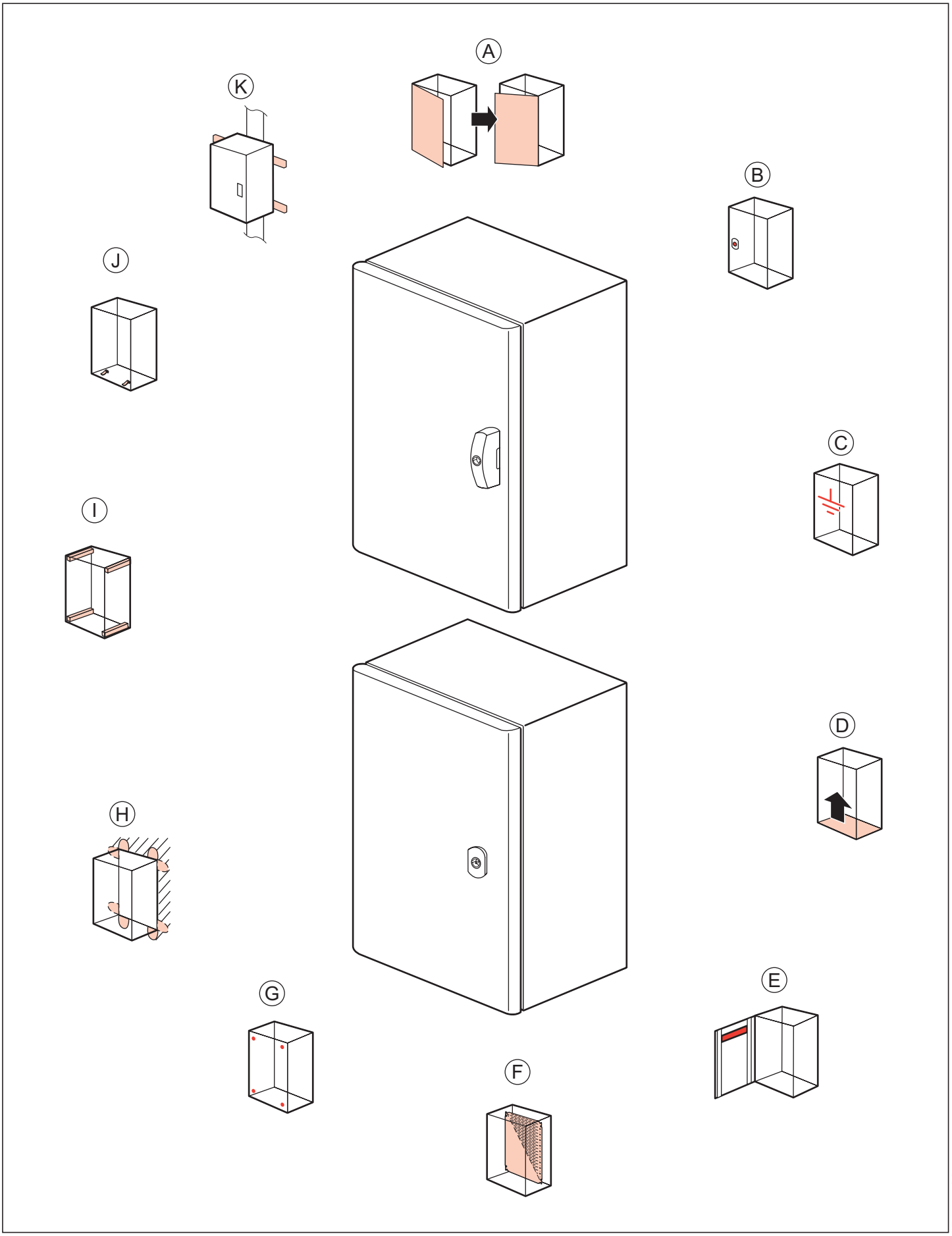

LE08301AA-00

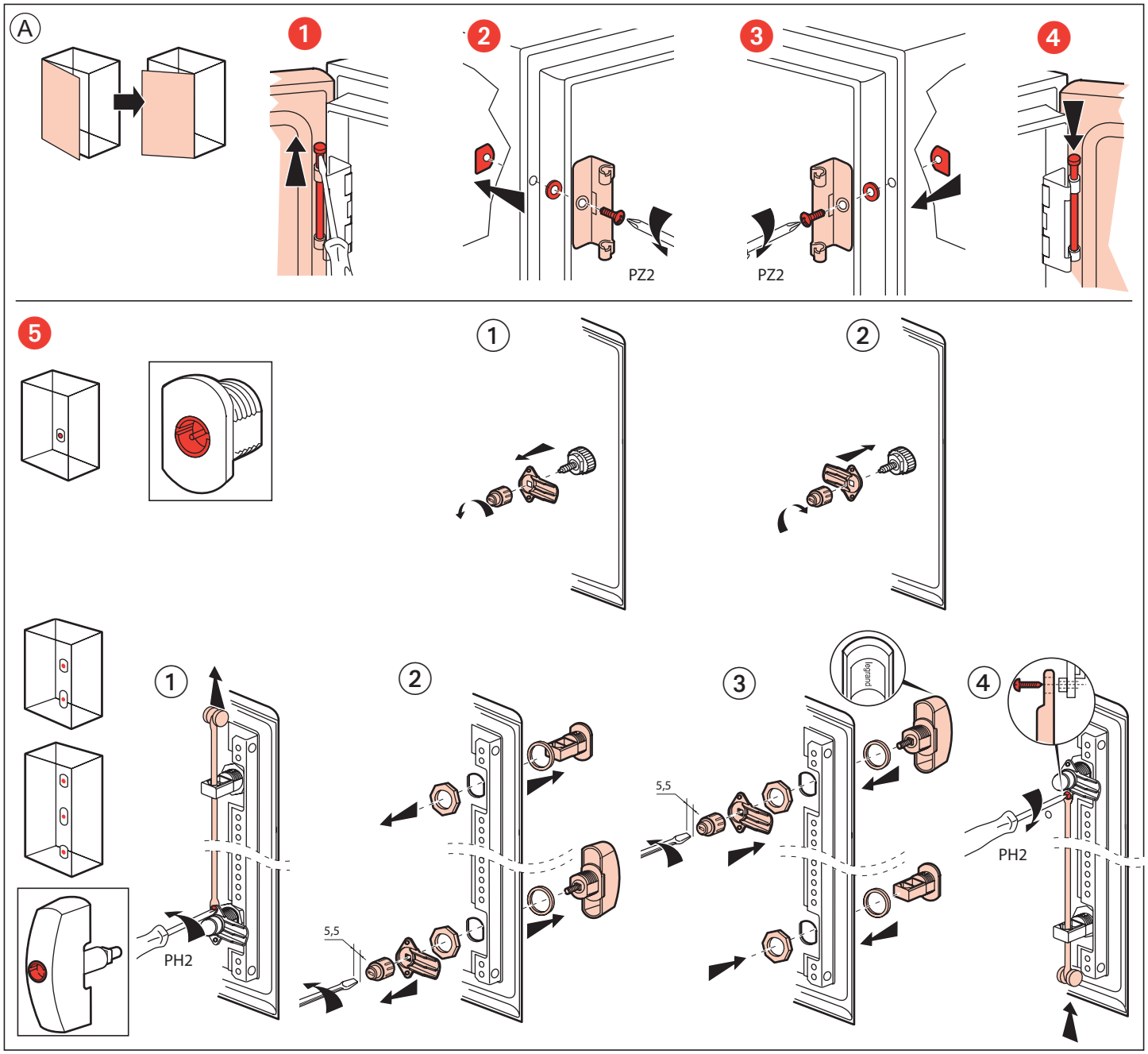

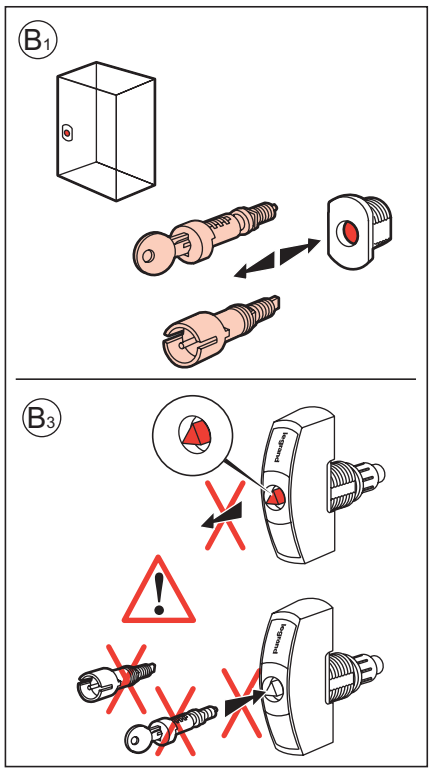

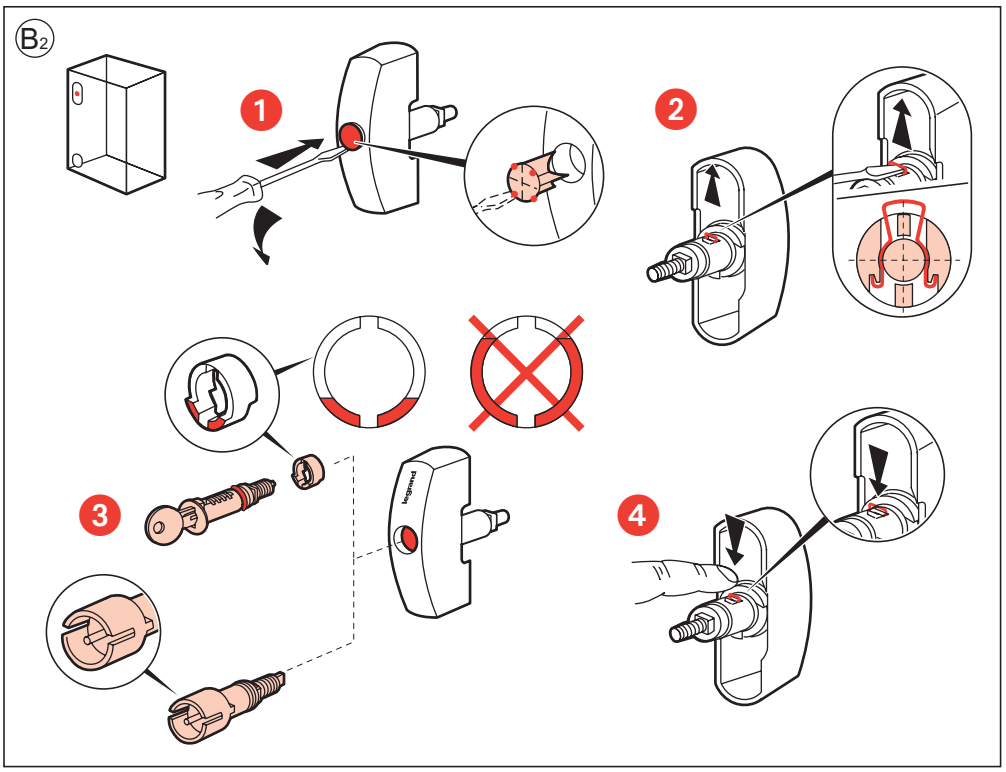

LE08301AA-00

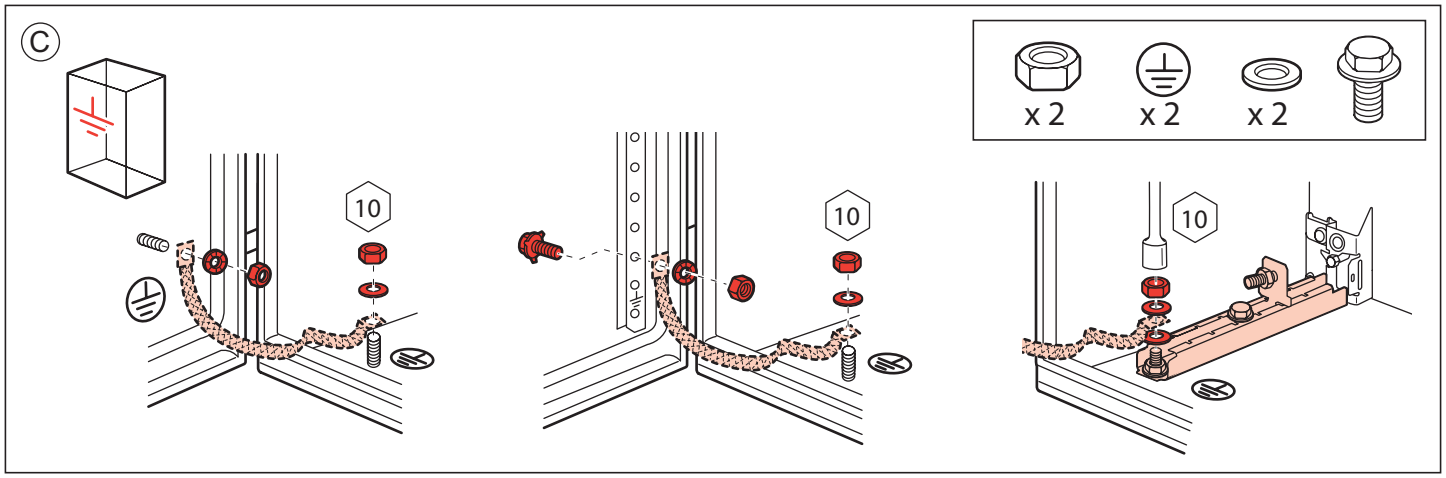

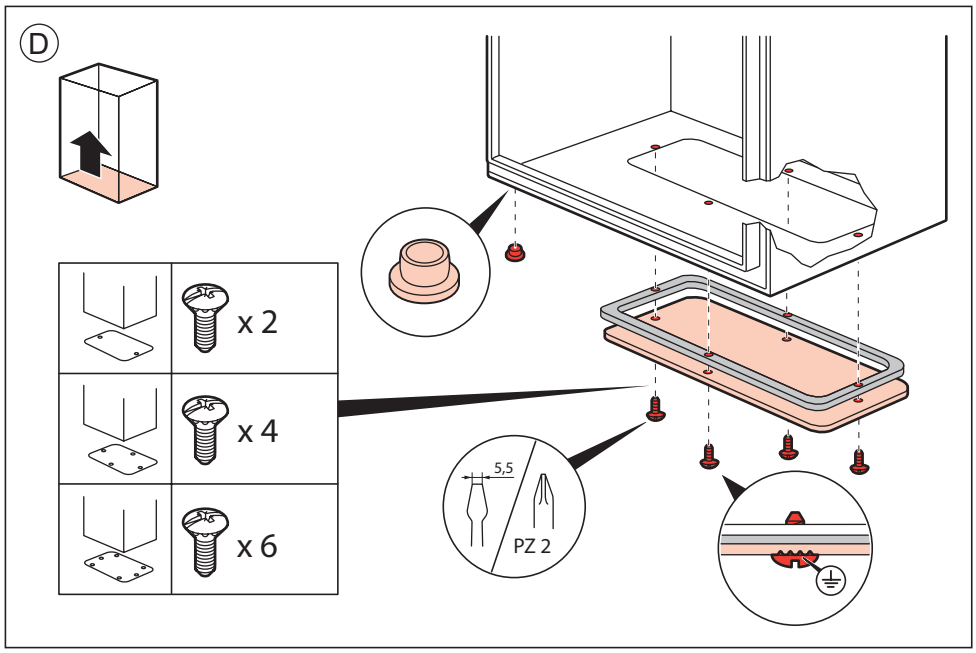

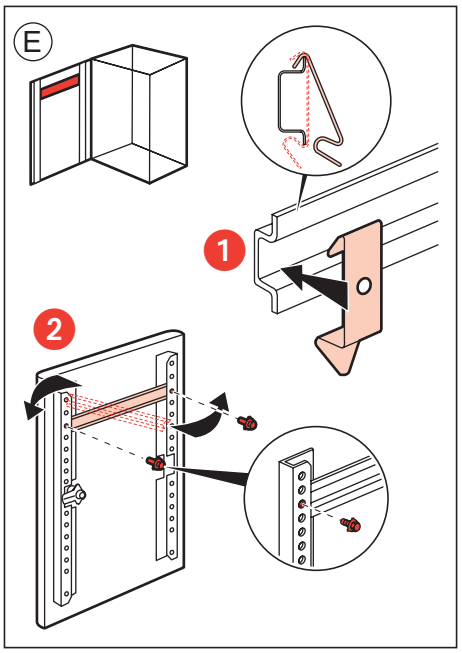

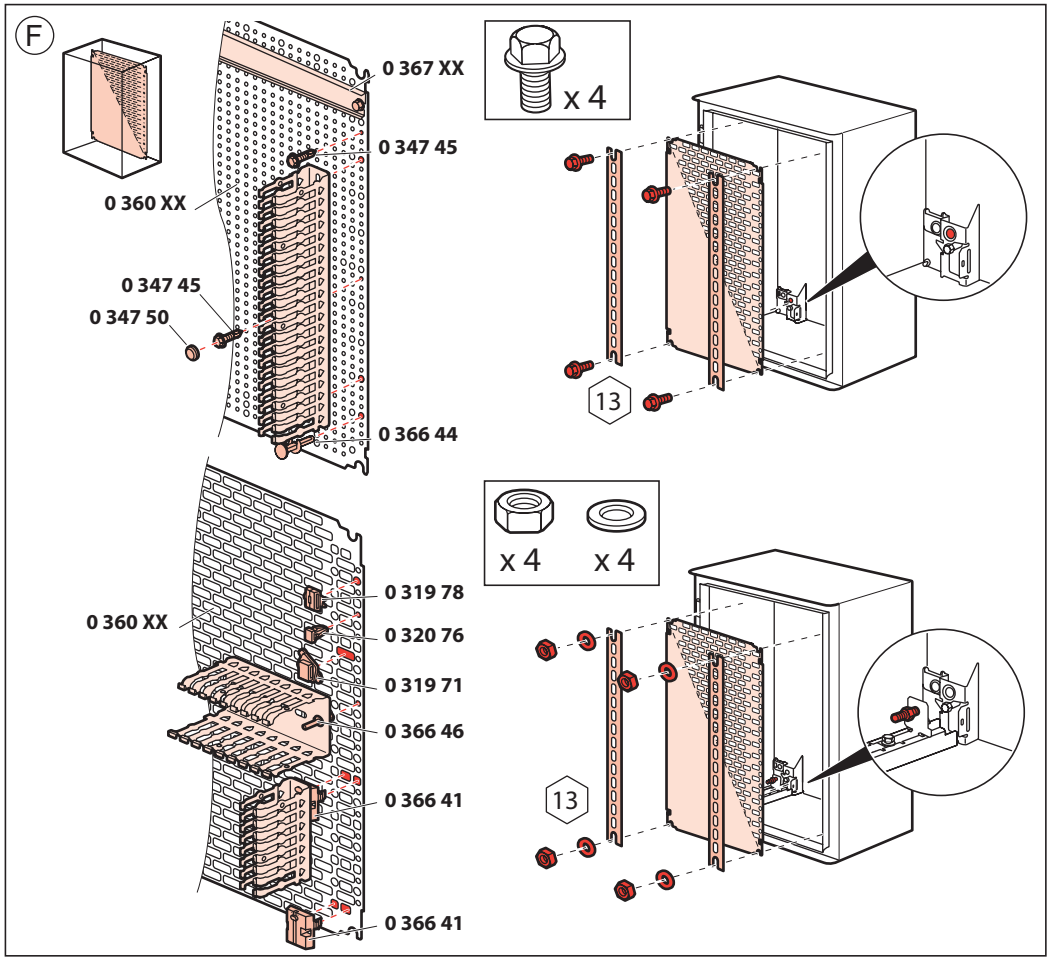

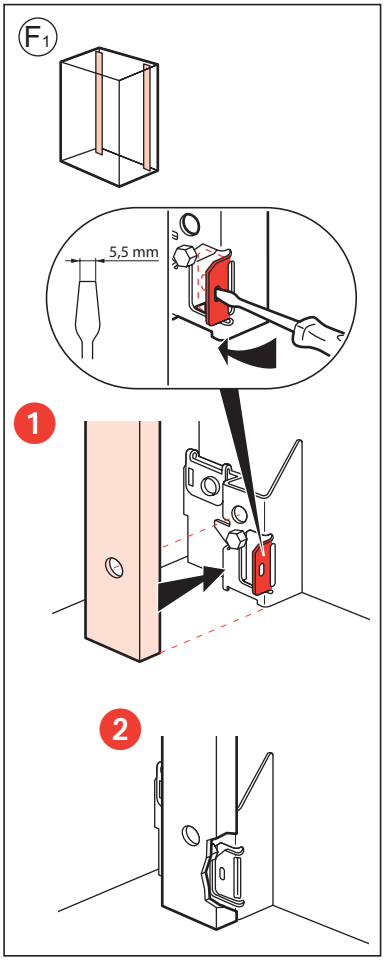

LE08301AA-00

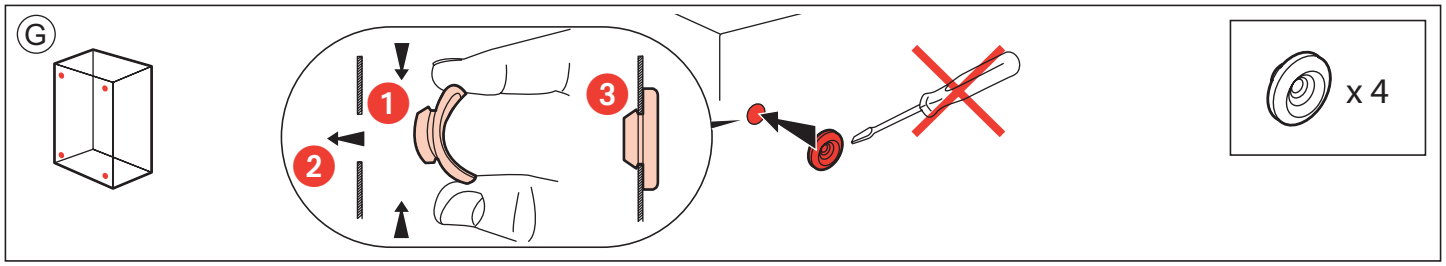

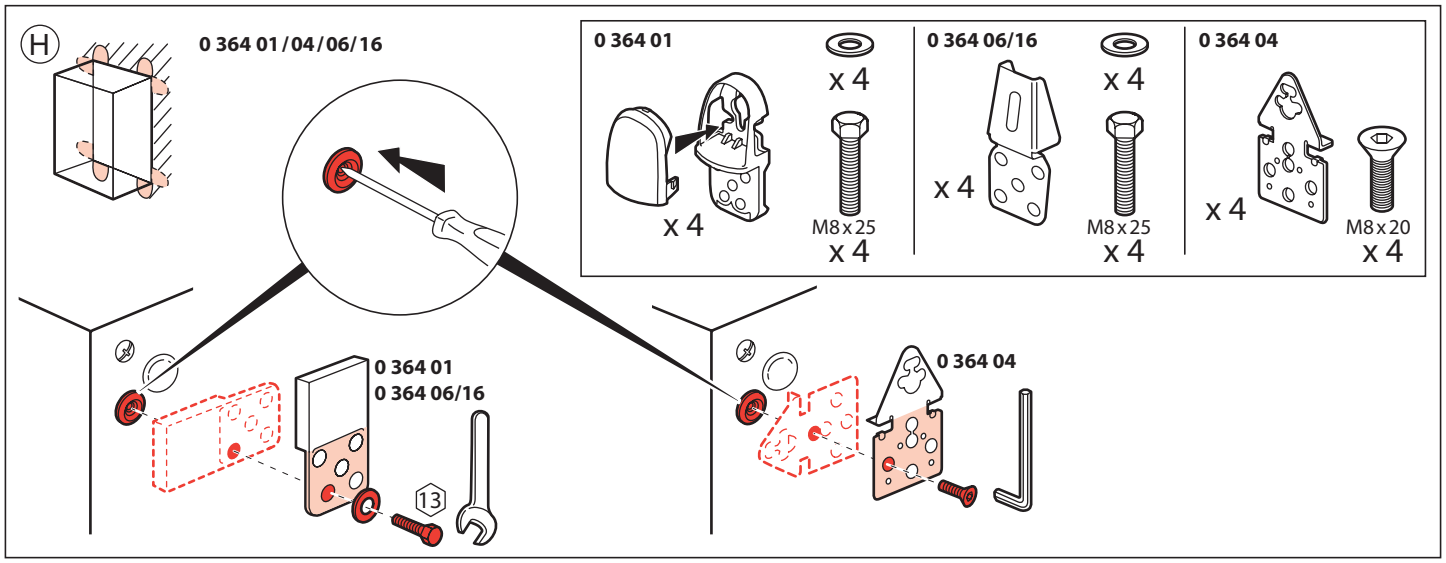

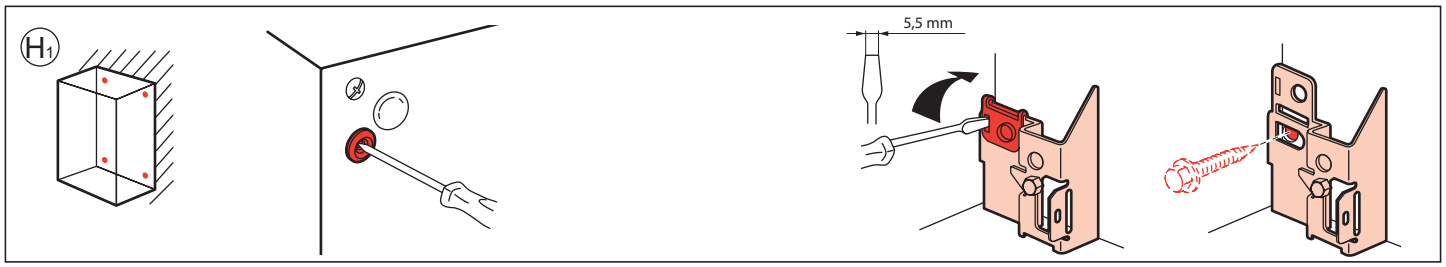

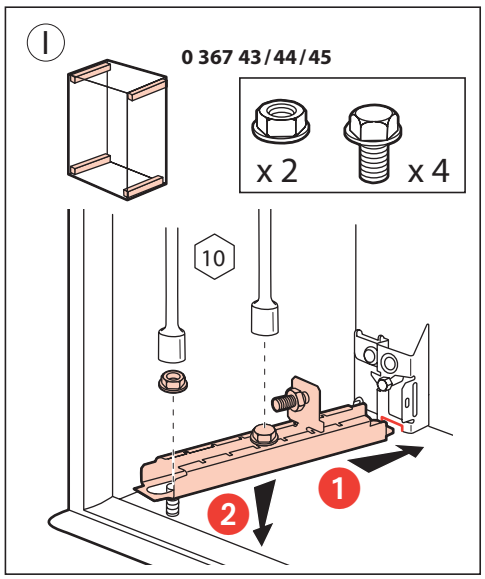

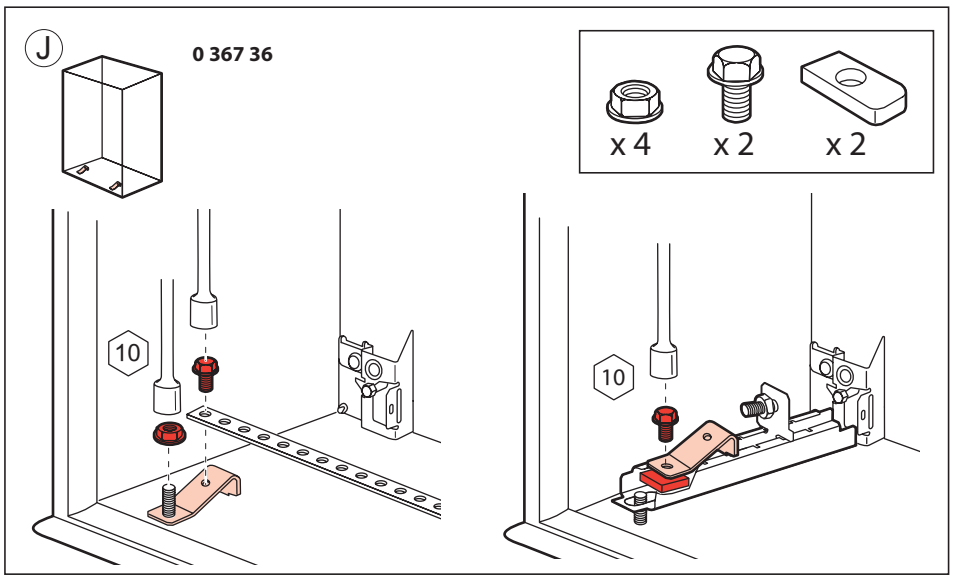

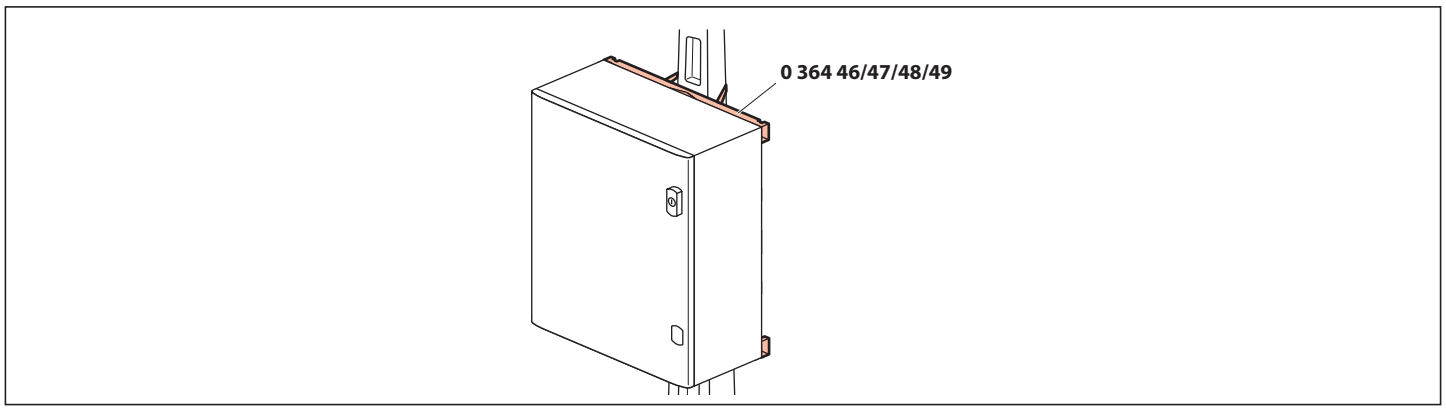

LE08301AA-00