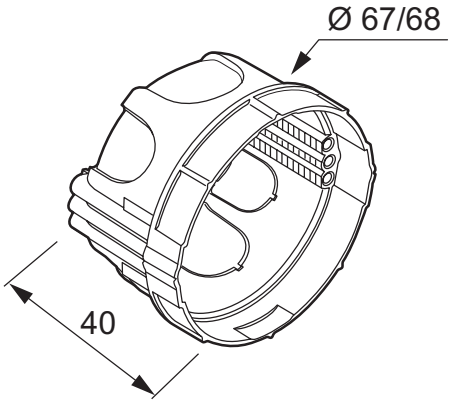
Ø 67/68
40

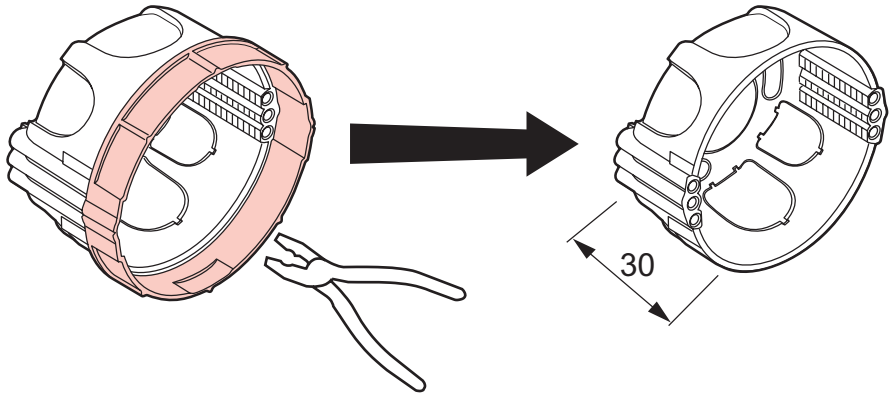
30

1
CLAC

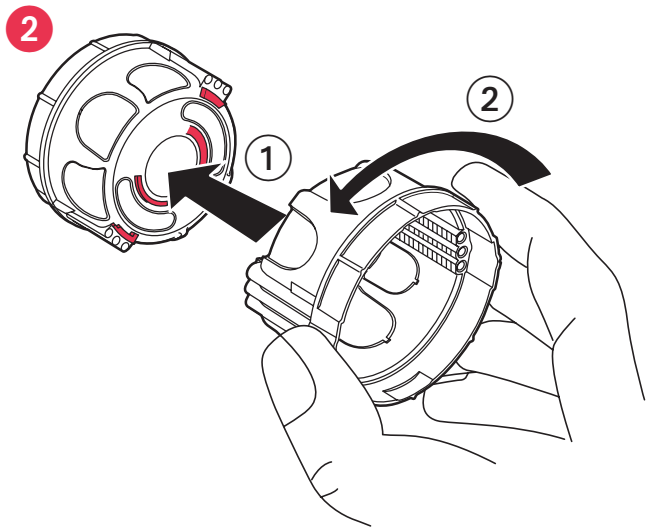
2
1
2

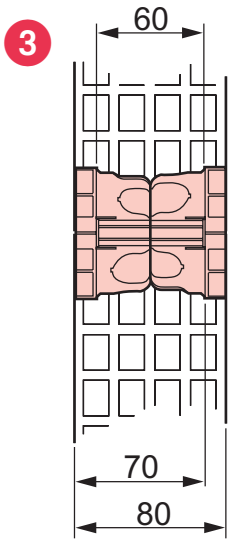
3
60
70
80