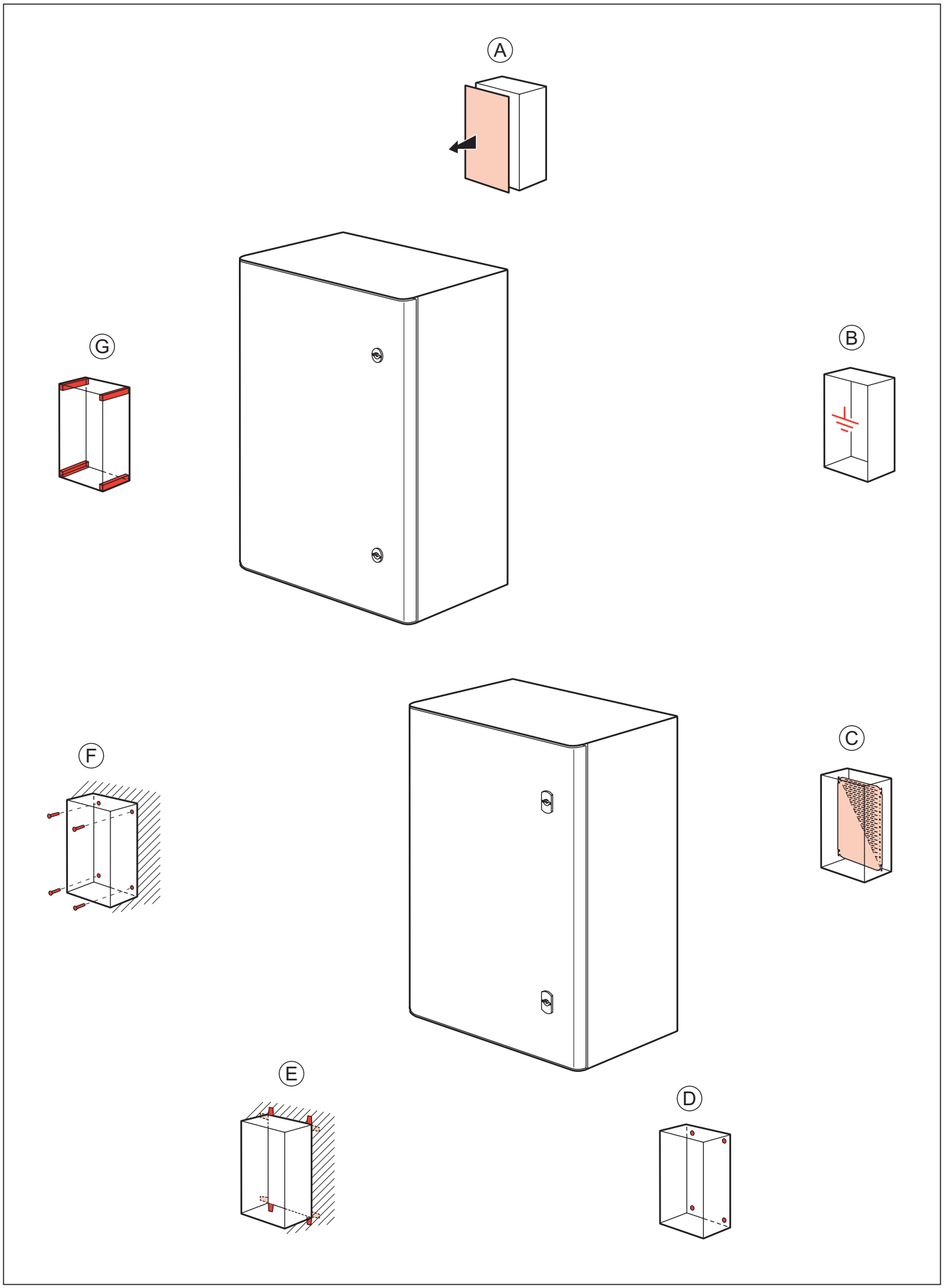

N041169/06

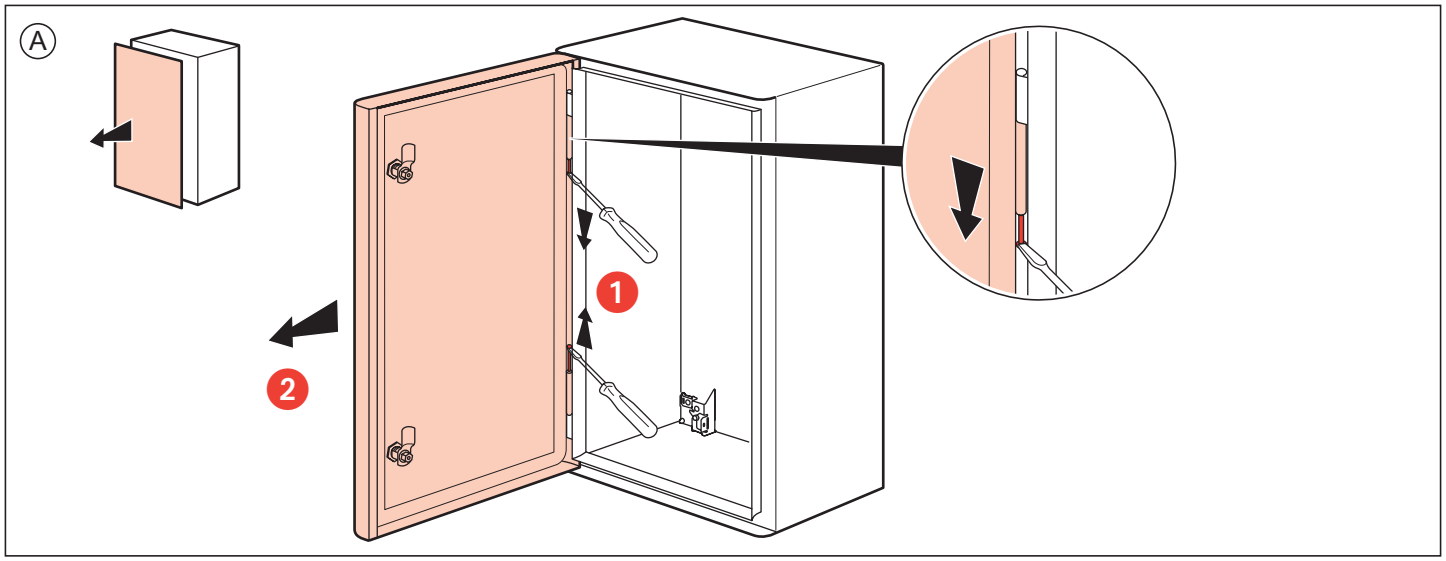
A
1
2

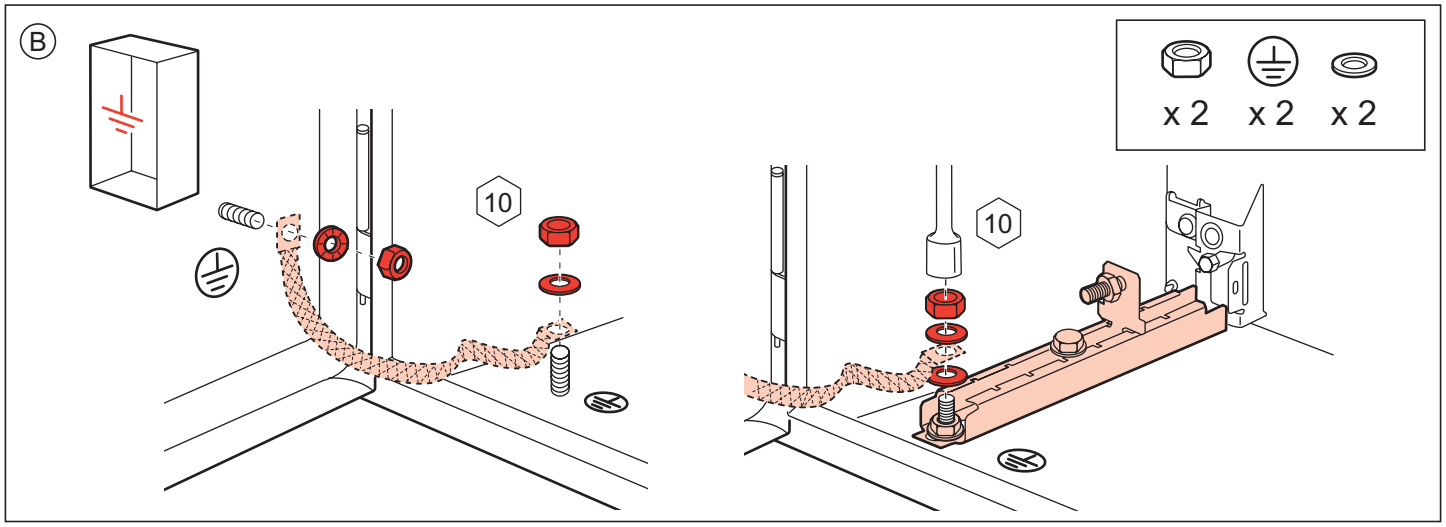
B
x 2
x 2
x 2
10
10

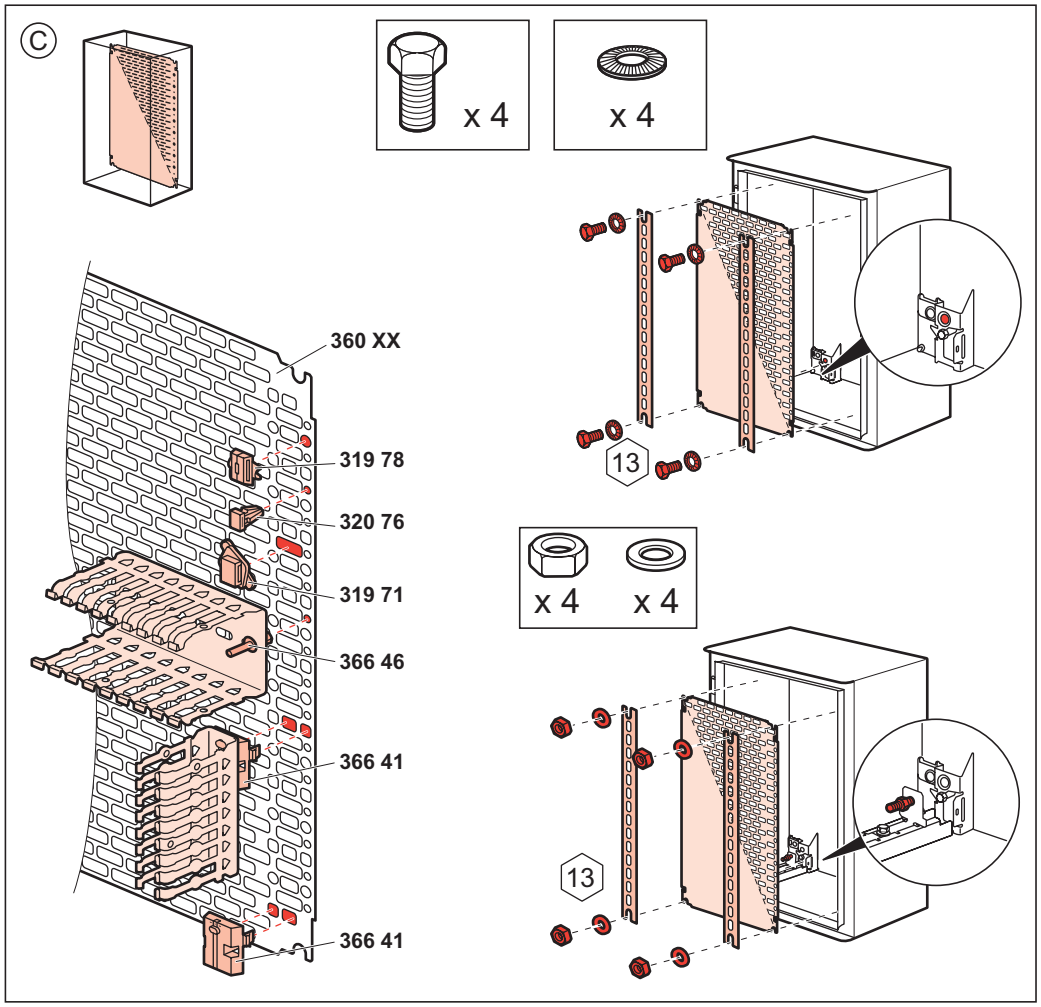
C
x 4
x 4
360 XX
319 78
320 76
319 71
366 46
366 41
366 41
13
x 4
x 4
13

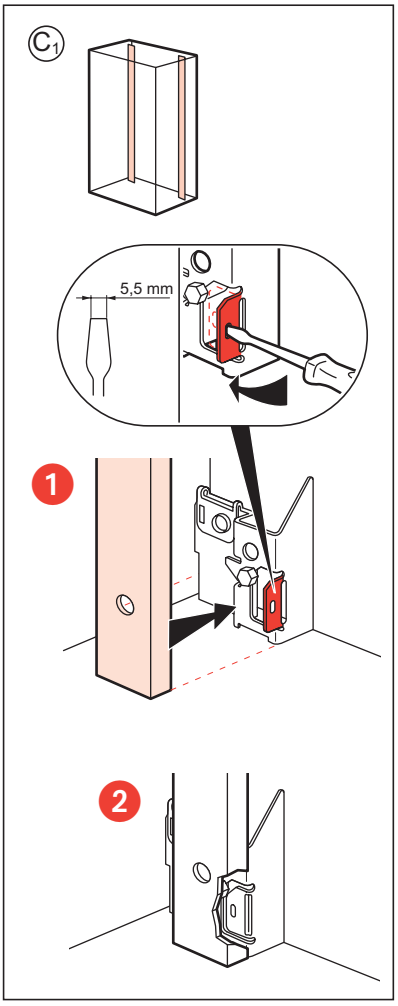
C1
5,5 mm
1
2

N041169/06

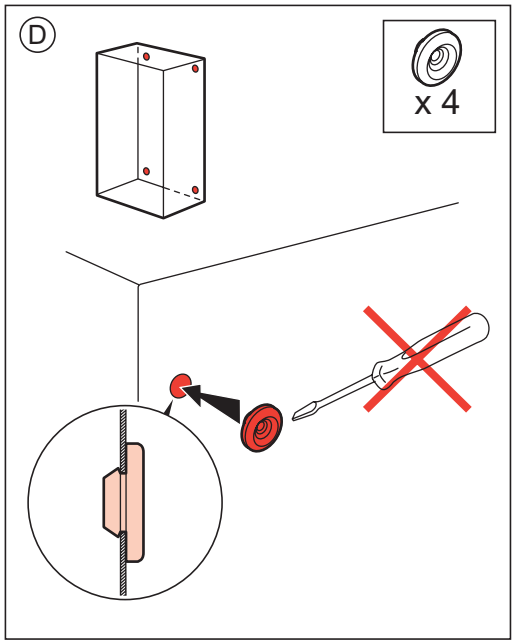

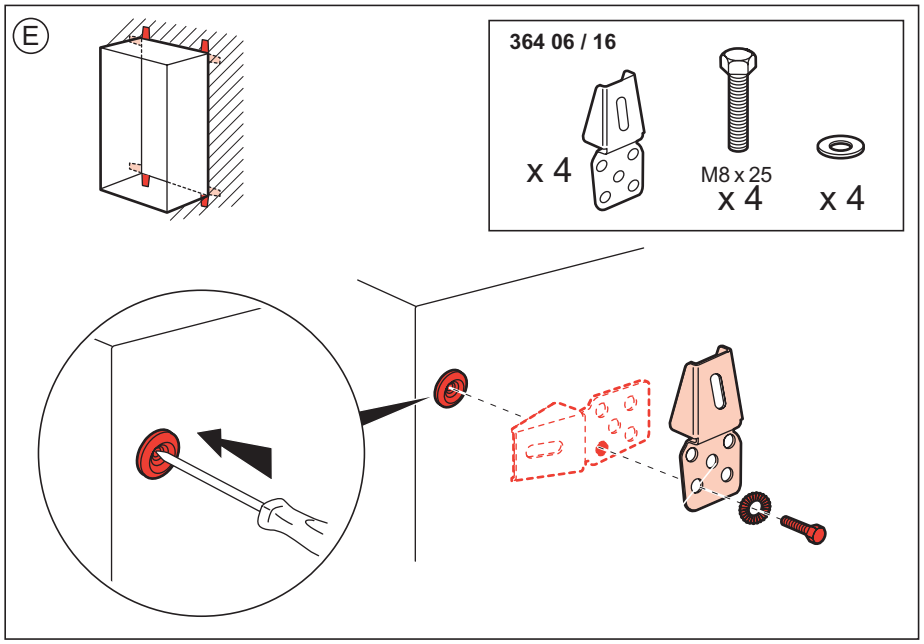

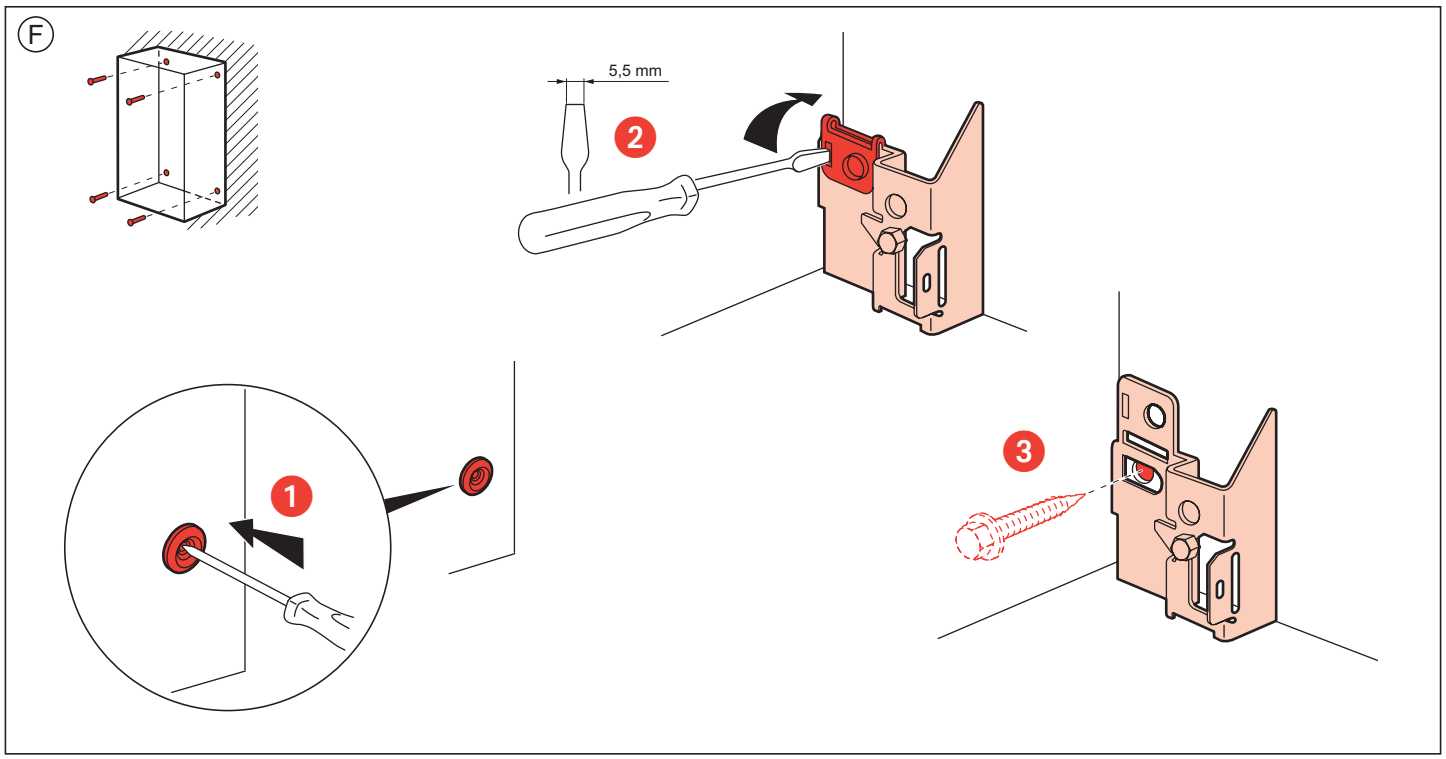

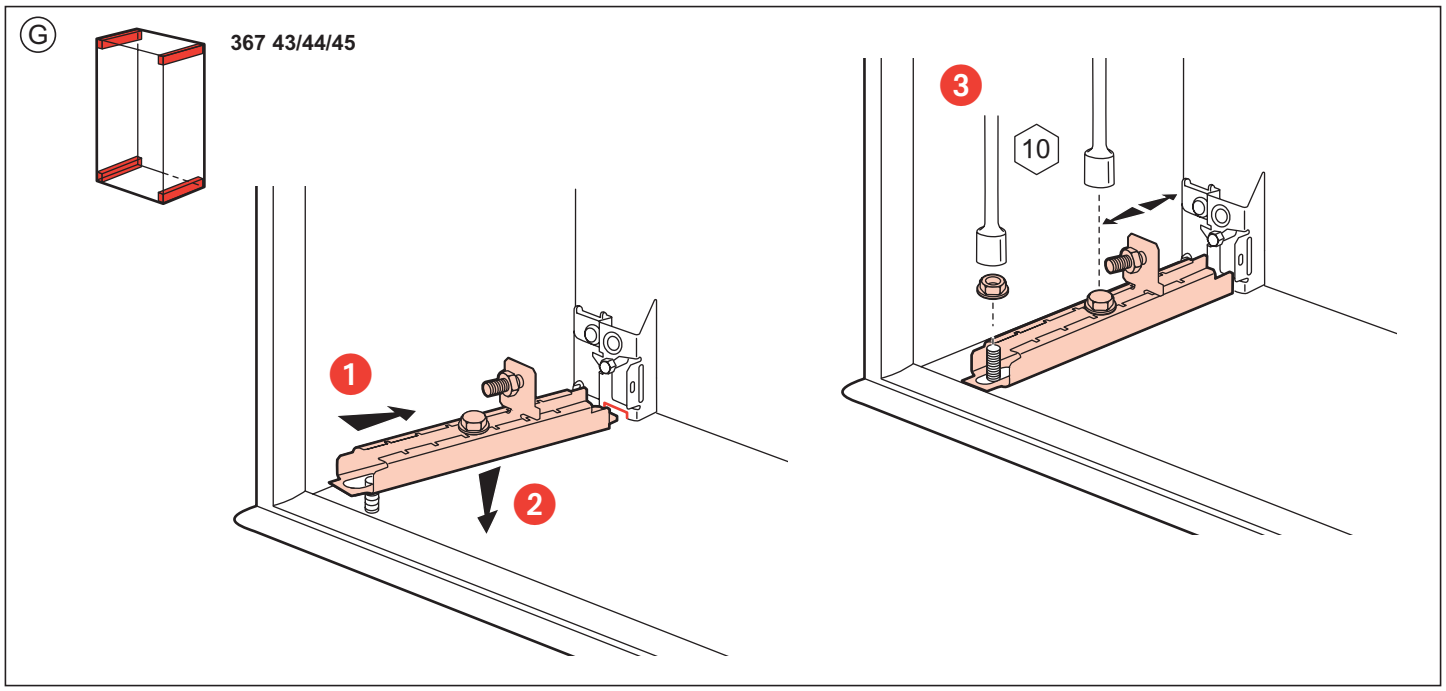

N041169/06