legrand®

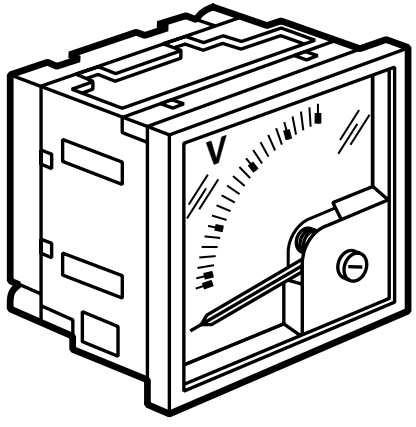

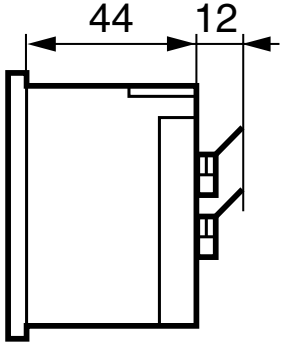

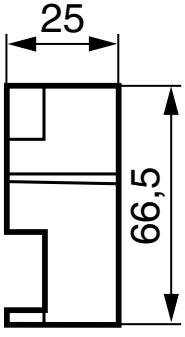

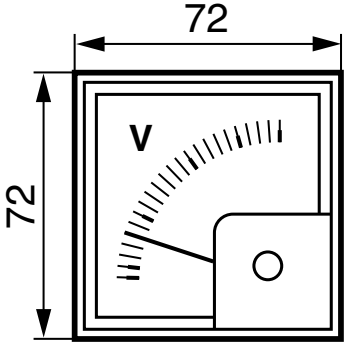

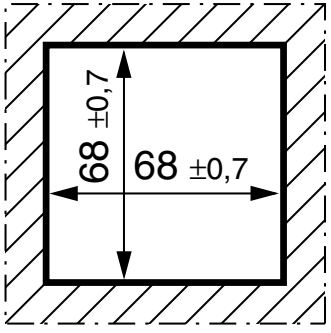

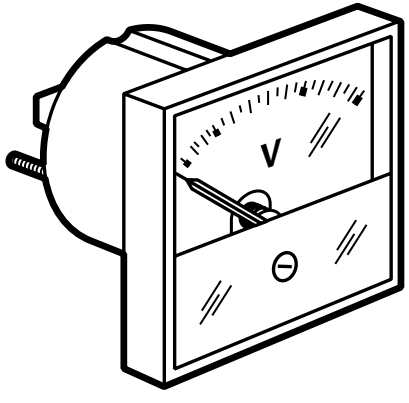

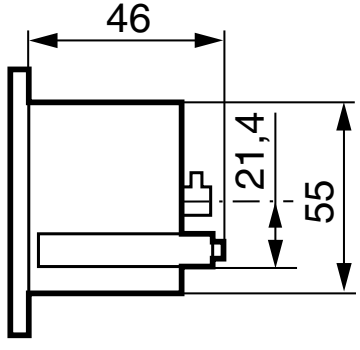

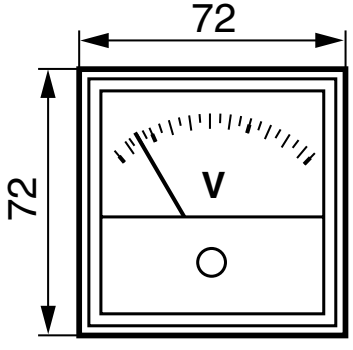

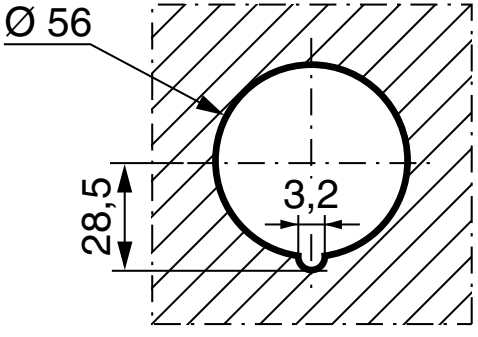

N0064FV7/00